TRACTORS

T25A
T25A2
T25A3

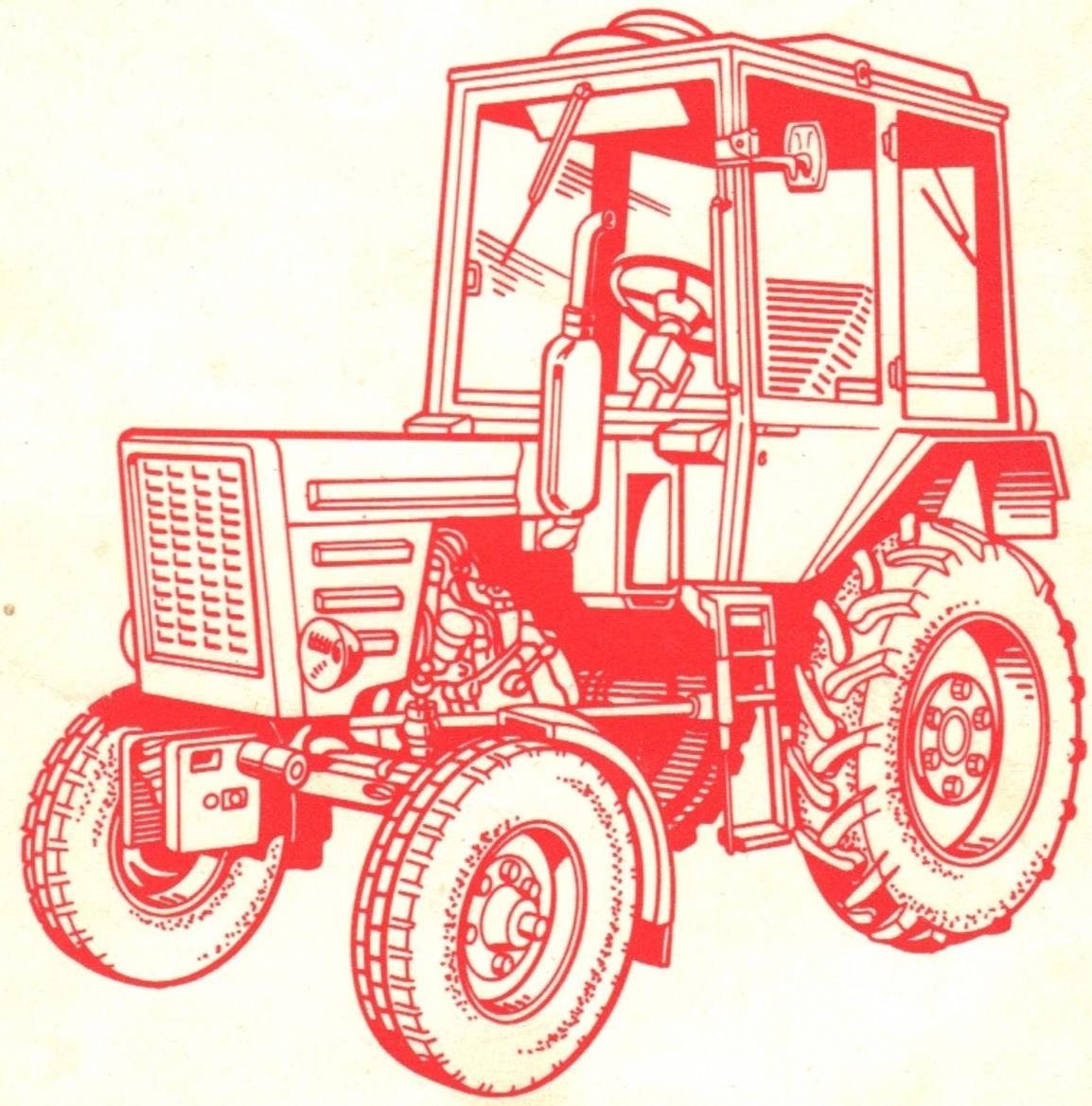

OPERATOR'S MANUAL

VTF VLADIMIRETS USSR

ЭКСПОРТ EXPORT | **10030025**

Продавец (экспортер)
Seller (exporter)

VTF «Vladimirets» Vladimir Tractor Plant, Vladimir, Russia

УПАКОВОЧНЫЙ ЛИСТ №
PACKING LIST

Грузополучатель, адрес, страна
Consignee, adress, country

США А/О «Беларусь Машинери Инк»
USA «Belarus Machinery Inc»

Контракт № 810-00401510/40100-01
Contract от

Заказ-наряд №
Nariad-Order от

Лист 1 Листов 1
Sheet Sheets

Марки и номера Marks and numbers	Наименование и код товара Description and code of goods	Номера мест Package No	Единица измерения Unit	Количество товара Quantity	Масса, кг брутто/нетто Mass, kg gross/net
T25A2	Трактор Tractor	1/1	Штук Pieces	1	
	Комплект запасных частей инструмента и принадлежностей трактора Set of tractor spares. tools and accssories	»	Ящик Box	1	
	Ключ включателя стартера Keys to starting switch	»	Штук Pieces	2	
T25A.00.000Д7-А	Инструкция по расконсервации Depreservation instruction	»	»	1	
ФП131-3717010	Фонарь освещения номерного знака License plate light	»	»	1	
T25Б.48.150	Прокладка Gasket	»	»	2	
14.56.022-2А	Тяга продольная правая Draft link, right	»	»	1	
14.56.023-2А	Тяга продольная левая Draft link, left	»	»	1	
ПФ130АВ-3712010	Фонарь передний Front light	»	»	2	
ФП132ВЛ-37160-10	Фонарь задний левый L. h. rear light	»	»	1	
ФП132ВП-37160-10	Фонарь задний правый R. h. rear light	»	»	1	
ФП310Е-3731000	Световозвращатель Reflector	»	»	1	
ФГ16Н-3711000Г4	Фара тракторная Head lamp	»	»	2	

Марки и номера **Marks and numbers**	Наименование и код товара **Description and code of goods**	Номера мест **Package No**	Единица измерения **Unit**	Количество товара **Quantity**	Масса, кг брутто/нетто **Mass, kg gross/net**
14.56.190	Брус прицепа Drawbar	1/1	Штук Pieces	1	
14.56.036	Тяга центральная Centrale link	»	»	1	
	Гайка М6.6Н.6.019 Nut	»	»	6	
	Шайба А6.02.Ст3пс019 Washer	»	»	4	
	Шайба 6Т65Г Washer	»	»	14	
	Винт ВМ6.6д×12.58.019 Screw	»	»	8	
	Винт ВМ5.6д×22.58.019 Screw	»	»	4	
Т30.48.681	Прокладка Gasket	»	»	2	
	Паспорт Certificate	»	»	1	
	Техническое описание и инструкция по эксплуатации Description and Operating instructions	»	»	1	
	Каталог запасных частей Catalogue of spare parts	»	»	1	

Маркировка:
Marking:

USA
«Belarus Machinery Inc.»
Tractor T-25A2

Contract

Подпись
Signature

_____ 199 г.

TRACTORS
T25A, T25A2, T25A3

OPERATOR'S MANUAL

VTF VLADIMIRETS USSR

WARRANTY

The manufacturer removes malfunctions and troubles during the warranty term as specified in the certificate on condition that the tractor is operated in full compliance with this Manual.

The warranty is cancelled in case of departure from the instructions or violation of the manufacturer's adjustments (fuel feed setting in excess of the manufacturer's standard, other readjustments changing the operating conditions).

The tractor's front is on the engine side. Its right hand and left hand sides are those determined by a viewer facing the forward tractor motion direction.

This Manual is to provide the operator with information needed in operation and servicing of the tractor (tractor specifications, instructions for driving, lubrication, adjustment, doing daily and seasonal jobs).

Particular attention should be paid to numerous safety regulations set forth in the Manual. Though safety was attached much importance to in designing the tractor, the operator must understand and abide by all safety regulations if accidents are to be avoided for sure.

Since efforts are continually made to improve the performance and reliability of the tractor, minor changes may be introduced in its design without special notice.

Some equipment mentioned in the Manual is lacking on the given tractor. This equipment is optional. The list of optional equipment is given on page 59.

Optional manuals on maintenance and repair contain detailed information on maintenance and trouble shooting jobs.

1. SYMBOLS

1.1. Use of Symbols

In this Manuals symbols of common use all over the world appear beside the text.



For instance, in this Manual this symbol indicates important safety regulations. Read the passages indicated by this symbol with particular attentión.

1.2. Symbols Occurring in the Manual



Attention, state of emergency

N

Neutral



Safety belt



Position of lever:

float



lower



neutral



lift



Decompression mechanism



Differential interlock



Oil pressure in engine



Continuous adjustment by displacement



Oil temperature in engine



PTO disengaged



PTO engaged



Parking brake



Horn



Upper beam



Lower beam



Reversing lights



Marker lights



Clutch



Fan



Windshield wiper

2. ABBREVIATIONS

PTO - power take-off
M - maintenance
GB - gearbox
FM - forward motion
N - neutral (in gearshift chart)
RM - reverse motion
SH - swinging hitch
RG - reduction gear
ВКЛ - On
ВЬIКЛ - Off
З - ЗИМА (Winter)
Л - ЛЕТО (Summer)

UDOL - upper dipstick oil level (in crankcase)
CR - clockwise rotation
CCR - counterclockwise rotation
HS - high setup
MS - middle setup
LS - low setup
LDL - lower dipstick level (oil in crankcase and hydraulic housing)
UDL - upper dipstick level (oil in hydraulic housing)
HLS - hydraulic linkage system
HH - hydraulic hook

Before using the tractor, read this Manual thoroughly paying particular attention to safety regulations.



When operating the tractor, do not wear loose clothes which may be worked up between moving or rotating parts of the tractor or mounted (trailed) machine or implement.



N

Before starting up the engine, make sure that all the control levers of the GB, hydraulic system, PTO are in the neutral position.

Exhaust gases contain fatal carbon monoxide. To avoid poisoning, do not let the engine run indoors. Starting up the engine indoors is permissible only on condition of adequate ventilation or withdrawal of fumes outside the building.

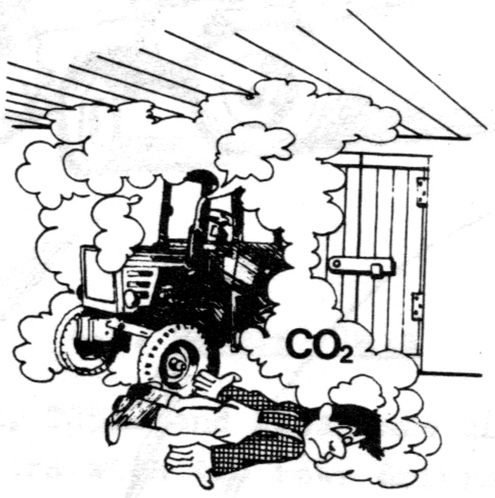

Before lifting or lowering the mounted implement as well as starting the tractor, make sure there are no people nearby.

Do not let anyone, especially children, go for a drive on the tractor or trailer.



Do not try to get in or out of the cab of the tractor on the go. Driving is permissible from the operator's seat only.

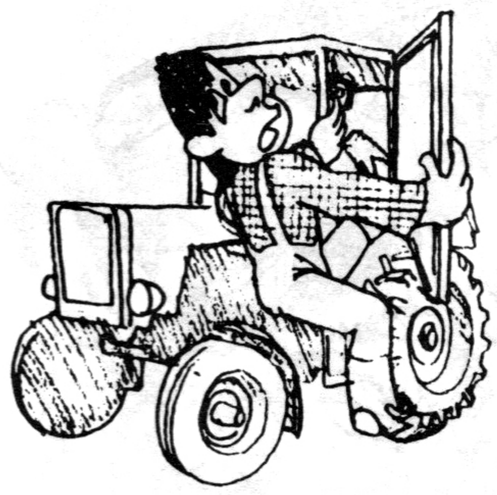

(P)

Before leaving the cab, position all the GB control levers neutrally, lower the mounted implement and apply the parking brake. Never let the implement remain in the upper position.

Never leave the running engine unattended. Shut down the engine before leaving the tractor.

Do not stay near or under the raised mounted machine. The machine must rest on supports when being given service.

Do not fail to do maintenance, adjust or clean the PTO-driven implement and shut down the engine before engaging or disengaging the PTO cardan.

The PTO cardan protective housing must be always in place except for possible cases specified in implement operating instructions.

The PTO protruding end must be capped when not used.

Slow down on slopes, rough ground, and when making abrupt turns. Avoid abrupt turns when driv-

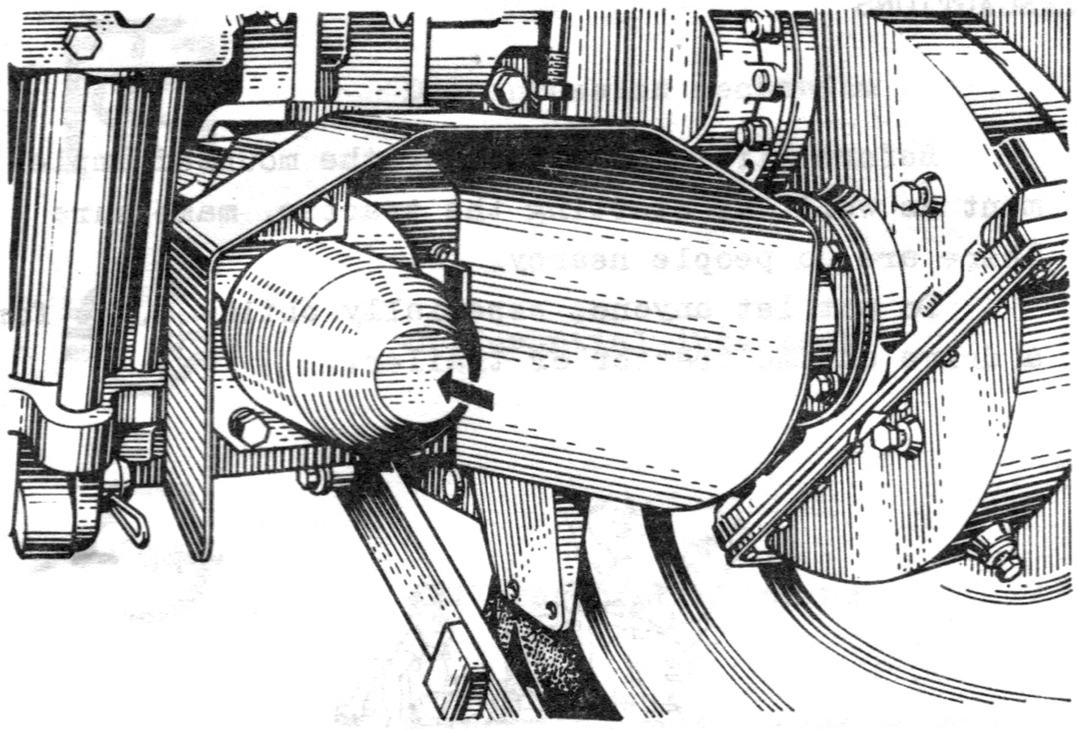

ing on slopes. Avoid pot-holes, ditches and other obstacles which may cause overturning, especially on slopes.



Before descending a steep slope, shift for one of the low gears to make the tractor drivable with least possible use of its brakes. Never go downhill without one of the gears engaged. Prior to climbing a steep grade, engage one of the low gears to avoid the need for shifting gears half-way.

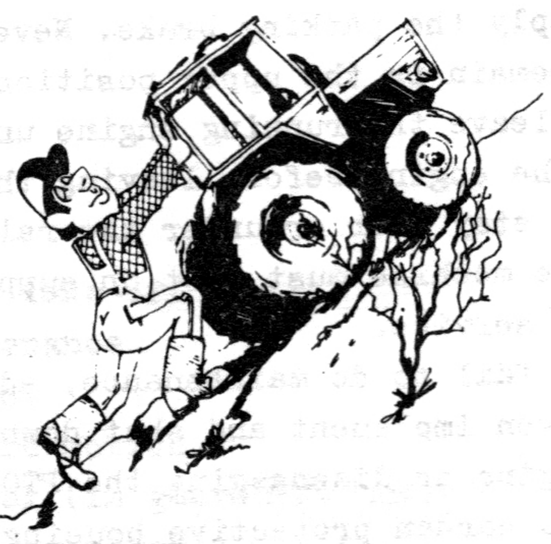

If the tractor finds itself in a deep pit, run reverse out of the pit to avoid overturning. This applies to climbing very steep slopes as well.

Do not drive too close to edges of gullies or ditches for the tractor may overturn in case of their possible collapse.





Before crossing a dam, ford, ice field, etc., make sure that the cross is possable. Clamp the door and man-hole open before starting (see page 16).

Cross railway tracks at crossings only.

Before driving on a road, lock the brake pedals together. At high speeds, hard braking by pressing one pedal may result in skidding or even overturning.

While driving on an ice-glazed or slick road, take care to avoid skidding and losing control of the tractor. For instance, in case of left-hand skidding minimize the engine rpm while turning the steering wheel counterclockwise without engaging the gear.

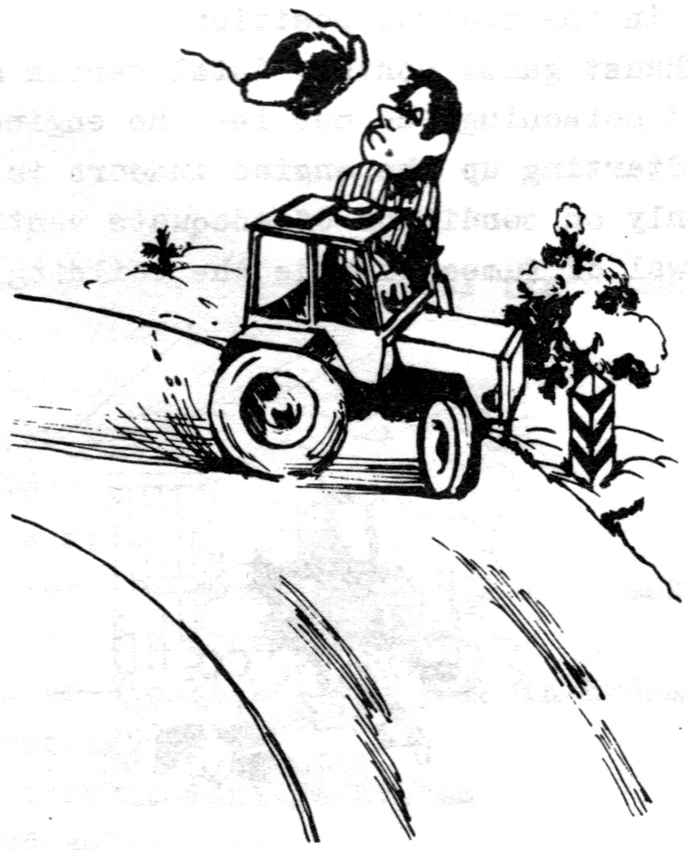

Before starting the tractor with a trailer, fix the hitch and attach a check rope.

The trailer or trailed machine, if exceeding the tractor in mass, must be rigged with brakes. Should the brakes be lacking, drive slowly and avoid up- and downgrades as well as hard braking.



Do not fail to apply safety belts in operating the tractor in all modes. Since the T25A2 tractor has no roll-over protective structure, the use of safety belts when driving this tractor is not permissible. Clean the straps, if dirty, with a soap solution free from alkali. The belts should not be ironed. Protect them from exposure to direct sunlight. Replace damaged or worn-out belts as well as those after a critical load.

Never attempt repair or adaptation of the roll-over protective structure (welding, drilling), for such attempts may impair the framework's strength. In case of trouble, the framework may be repaired exclusively at enterprises or repair shops authorized for repair of load-lifting mechanisms.

Do not do maintenance or repair jobs on the tractor with its engine running (unless recommended otherwise).

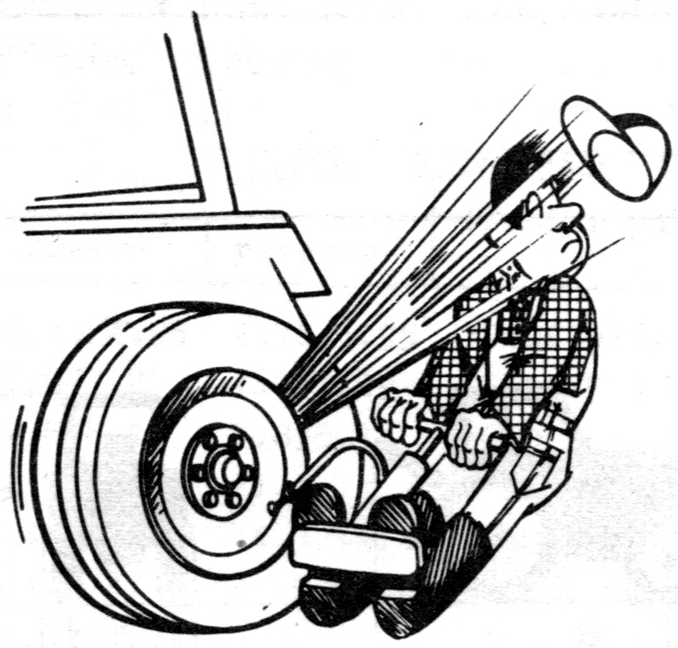

The rear wheel tire pressure must not exceed 0.25 MPa (2.5 kgf/cm^2). Failure to follow this recommendation may result in rapture of the tire bead.



Before detaching the hydraulic system oil lines, be sure to isolate the system from pressure (position the control lever to float). Check all oil lines for reliable coupling before letting in the pressure.

A high-pressure jet of fluid is powerful enough to damage the skin or cause serious illness. In case of skin damage or burn, consult a physicial right away.

Avoid letting electrolyte get in contact with your skin and clothes for it causes scalds and damages fabric.

To rule out an occasional short circuit, disconnect the ground before servicing the storage batteries and wiring. A short circuit may result in burns or damaged wiring.

Storage batteries produce explosive gas. Do not use open flame when servicing the batteries.



To avoid fire:

do not bring open flame close to fuel;

do not let straw, hay or other flammable materials fall on the exhaust manifold and muffler;

do not ride over burning or smouldering straw;

do not operate in places where open flame or smouldering objects are likely to fall on the tractor.

To avoid poisoning, read thoroughly the unstructions on using toxic chemicals before starting work with such substances.

4. DESCRIPTION AND SPECIFICATIONS

4.1. General Data

The T25A, T25A2 and T25A3 are universal farm wheeled tractors with two rear driving wheels. The tractors are designed for secondary tillage, sowing, planting of vegetables, cultivation of crops, inter-row cultivation of vegetables and orchards, hay making. They are also intended for doing livestock farm and transport jobs. The tractors can be operated with stationary machinery.

The T25A is a base model. The T25A2 and T25A3 differ from the base model in their make-up:

the T25A is provided with a safety cab having an emergency man-hole on the right side and a door on the left side. The door and man-hole openings are sealed and the floor is carpeted to prevent ingress of dust into the cab and make the latter warmer in winter. The cab is equipped with a heater and fan. The windshield is blown with hot air and the rear window is heated electrically in winter. The cab has interior lighting, sun visor, medical kit box, hanger for clothes, vacuum flask for drinking water, tool box. A rear view mirror is attached on the cab's left side;

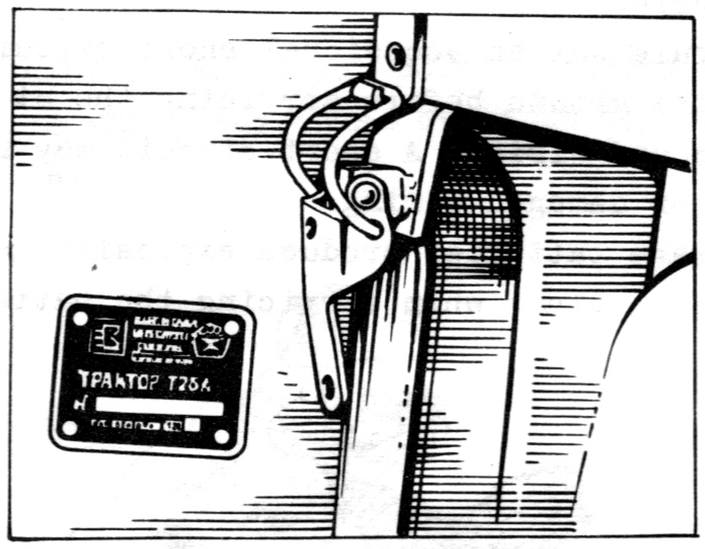

the T25A2 is provided with a canopy to protect the operator from sun and rain or snow;

the T25A3 is provided with a rigid roll-over protective structure.

The tractor model and serial No. appear on a nameplate secured on the tractor right side.

The engine model and serial No. appear on a nameplate secured on the engine right side.

The tractor features a two-cylinder four-stroke air-cooled direct-injection combined lube oil system engine, dry single-plate spring-loaded clutch, mechanical reversible transmission with six forward and reverse gears and two low forward gears.

The tractor is equipped with a rear HLS and HH, the latter enabling the operator couple and uncouple a trailer without leaving the cab. A SH may also be installed on the tractor. The tractor features a rear PTO.

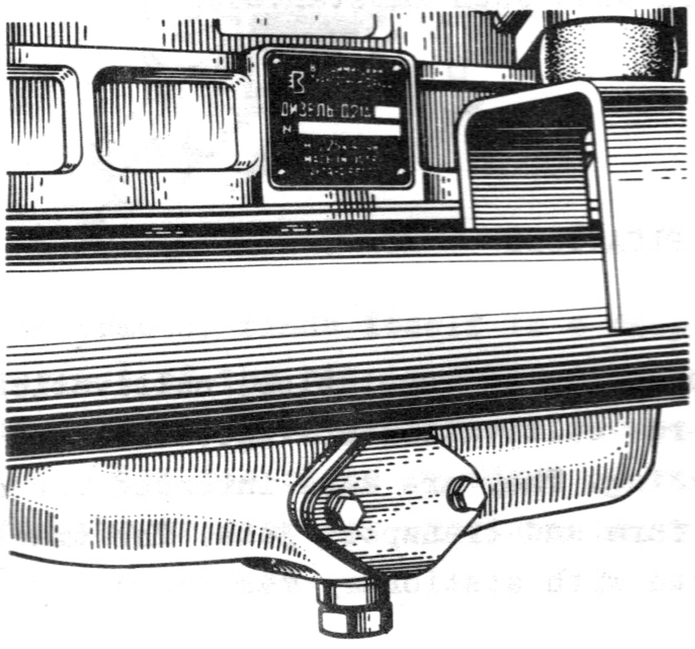

The tractor design allows for:

adjusting its cultivating clearance through 200 mm for passing over crop rows, tractor height adjusting for passing under tree branches and operation in low-ceiling buildings;

changing wheel track from 1100 to 1500 mm for cultivation of different row crops;

readjustment of the tractor for continuous operation in reverse.

A drive pulley may be installed on the tractor for driving stationary machines.

A brake cylinder is installed on the tractor for operation with a single-axle trailer (1ПТС -2Н).

Weights mounted on the tractor front part improve its longitudinal stability two to eight weights each 20 kg, as required). The tractor is delivered with two weights.

The electrical equipment is single-wire d.c., the function of the second wire being served by "ground", i.e. metal parts of the tractor.

4.2. Tractor

Type ..... universal, wheeled, reversible, drawbar category 0.6

Overall dimensions, mm:

Setup	a	b	c	h with tires 280-711/240--813	
				T25A	T25A2 T25A3
high	1630	3025	1420	2547/2570	2552 2522/2545
medium	1775	3180	1350	2477/2500	2492 2452/2475
low	1837	3245	1200	2327/2350	2342 2302/2325

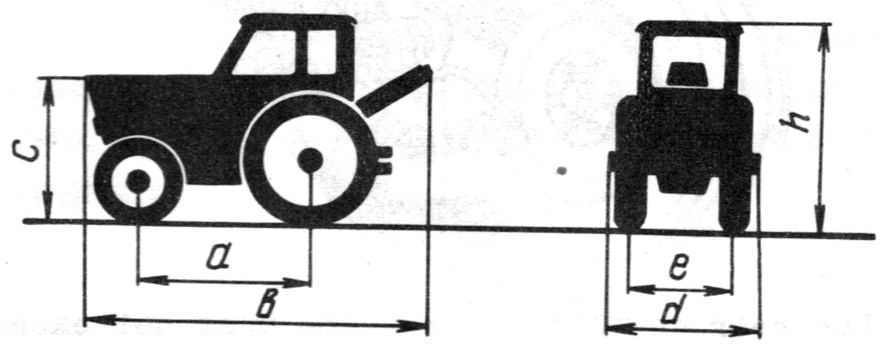

"d" (at minimum wheel track), mm 1472

"e" adjustable wheel track, mm:

front wheels 1200-1400

rear wheels (tires 280-711) 1200-1480

rear wheels (tires 240-813) 1100-1500

Angles of lateral and longitudinal static stability at running weight, high setup and minimum wheel track, min., deg.:

	α	β	γ
T25A	30	31	48
T25A2	34	36	44
T25A3	34	36	44

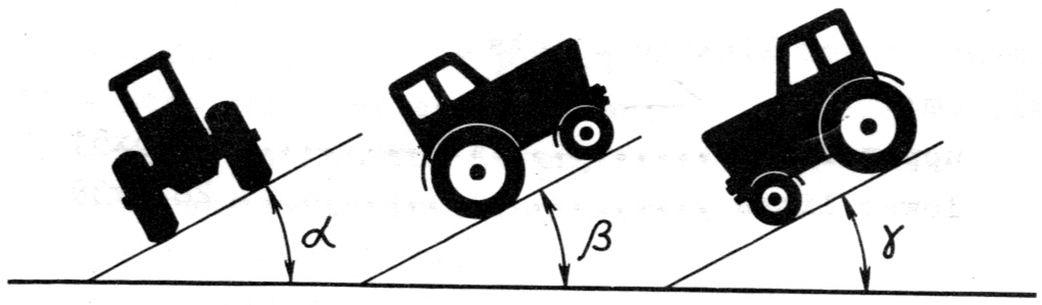

Cultivating clearance (under brake sleeves), mm:

	tires 280-711	tires 240-813
high setup	684	657
medium setup	564	587
low setup	427	450

Minimum ground clearance at low setup, mm 278

Radius of turn "R" with inner wheel braked (depending on wheel track and direction of turn), m ... 3.2-3.8

Fordability at low setup, min., m . 0.6

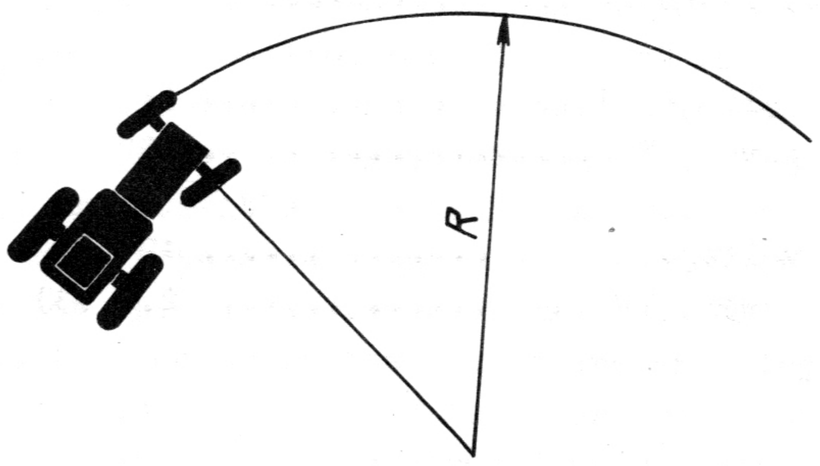

Design speed and drawbar pull with rated engine rotational speed 1800 rpm and rear wheel tires 280-711 (10.00-28)/240-813 (9.5-32):

Gear	Speed, km/h forward	Speed, km/h reverse	Drawbar pull, N (kgf)
1st	4.76/4.95	4.76/4.95	7910(791)/7930(793)
2nd	7.0/7.29	7.0/7.29	6530(653)/6210(621)
3rd	7.8/8.1	7.8/8.1	5670(567)/5390(539)
4th	11.4/11.9	11.4/11.9	3190(319)/3000(300)
5th	14.3/14.9	14.3/14.9	2130(213)/1990(199)
6th	21.0/21.9	21.0/21.9	770(77)/690(69)
low 1st	1.33/1.39	-	7910(791)/7930(793)
low 2nd	1.96/2.04	-	7910(791)/7930(793)

4.3. Engine

Type ..... two-cylinder, four-stroke, direct-injection diesel engine with in-line arrangement of cylinders

Model Д21А1

Power, kW (hp):

rated net ..... 21^{-3} (29^{-4})

rated gross ..... 22.5^{-3} (31^{-4})

Specific fuel consumption at rated net power, g/kW·h (g/hp·h) ..... 242^{+7} (178^{+4})

Rated engine speed, rpm ..... 1800±27

Engine speed range, rpm 900-1950

Minimum steady idling speed, rpm .. 800

Firing order 1-2-0-0

Sense of engine crankshaft rotation (if viewed from fan drive end) ..... clockwise

Bore and stroke, mm 105x120

Compression ratio 16.5:1

Injection pump ..... single-plunger

Injector 16.1112010

Air cleaner ..... inertia oil-bath type

Lubrication system ..... combination: forced by oil pump and splash

Oil filter ..... centrifugal, jet-driven

Cooling ..... air, forced

Starting of engine ..... by electric starter

4.4. Power Train

Clutch ..... dry, single-plate, spring-loaded

Gearbox ..... mechanical, reversible

PTO:

type ..... transmission driven

rotational speed at 1775 rpm engine crankshaft speed, rpm 549

Ø of end and number of splines ..... 35 - 6 splines or 38 - 8 splines

direction of rotation (if viewed tractor motionwise) ... clockwise

Drive pulley:

diameter, mm 300

width, mm 120

rotational speed at rated engine crankshaft speed, rpm . 1028

direction of rotation ..... reversible

4.5. Running Gear

Wheel size, mm (inch):

front 170-406 (6.00-16)

rear ..... 280-711 (10.00-28) or 240-813 (9.5-32)

Brakes:

foot brakes ..... band, floating-type, one on each rear wheel

hand brake ..... effects foot brakes, fixed in applied condition at stops

4.6. Hydraulic Lift System

Type ..... unitized, with independent pump drive
Rated pressure, MPa (kgf/cm^2) 14 (140)
Maximum pressure, MPa (kgf/cm^2) ... 17.5 (175)
Hydraulic lift linkage load capacity at hitch point, kg 600
Pump ..... gear-type, model НШ-10Е-3-Л
Automatic hitch dimensions, mm:
a 460
b 600

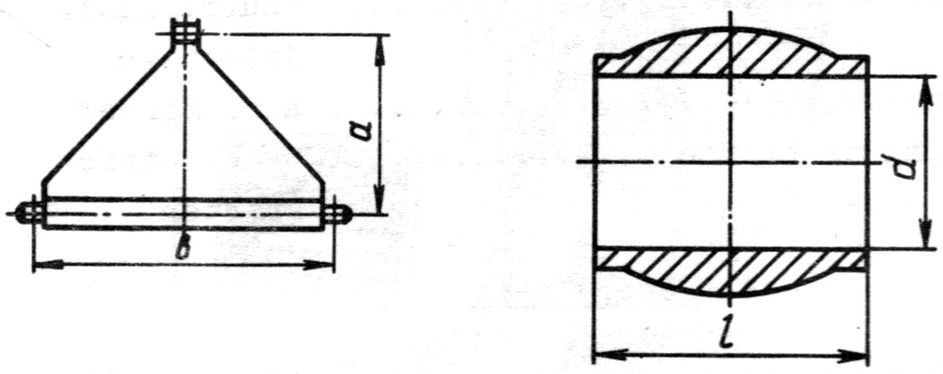

Dimensions of linkage points dxl, mm:
upper link 25.5x51
lower links 28.5x38

4.7. Electricals

Wiring ..... single-wire, negative ground-return
Rated voltage, V 12
Storage batteries:
model ЭСТ-155ЭМ
number of tractor 2
voltage, V 6
capacity, A·h 155
Alternator:
rated voltage, V 14
rated power, W 700
Starter:
Rated voltage, V 12
Rated power, kW (hp) 2.2 (3)

5. CONTROLS AND INSTRUMENTS

5.1. Controls

1 - steering wheel;
2 - main cylinder control lever;
3 - remote cylinder control lever;
4 - hand brake lever button;
5 - hand brake lever;
6 - fuel feed control pedal;
7 - fuel feed control lever;
8 - PTO control lever;
9 - HH opening chain ring;

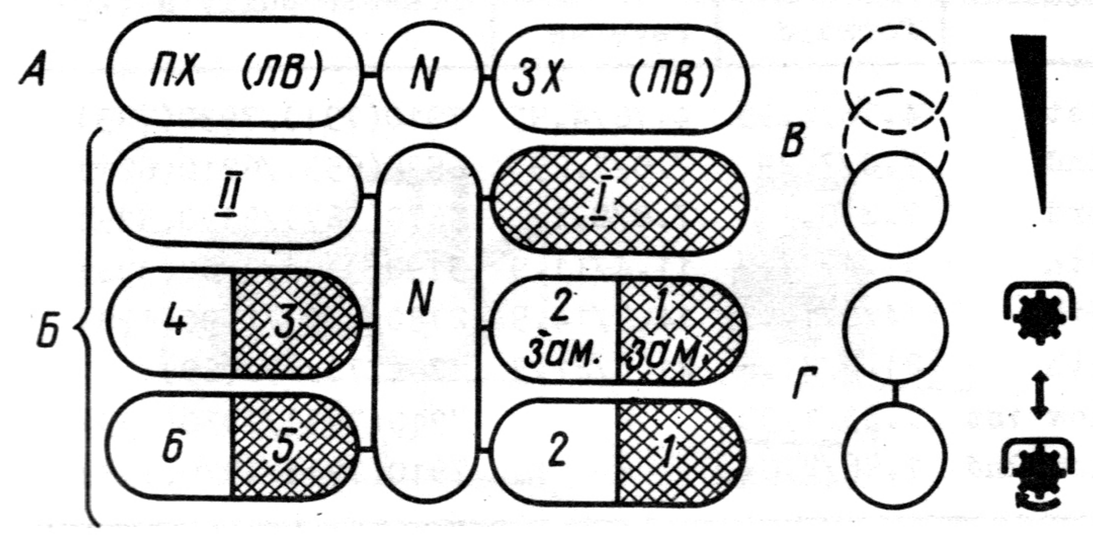

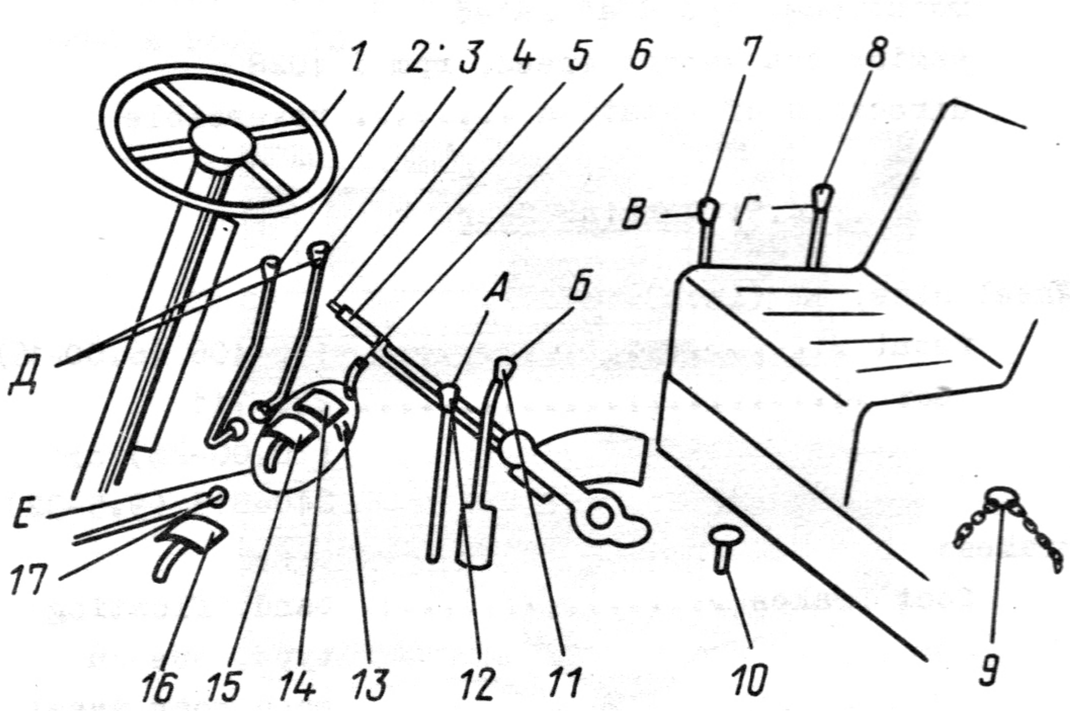

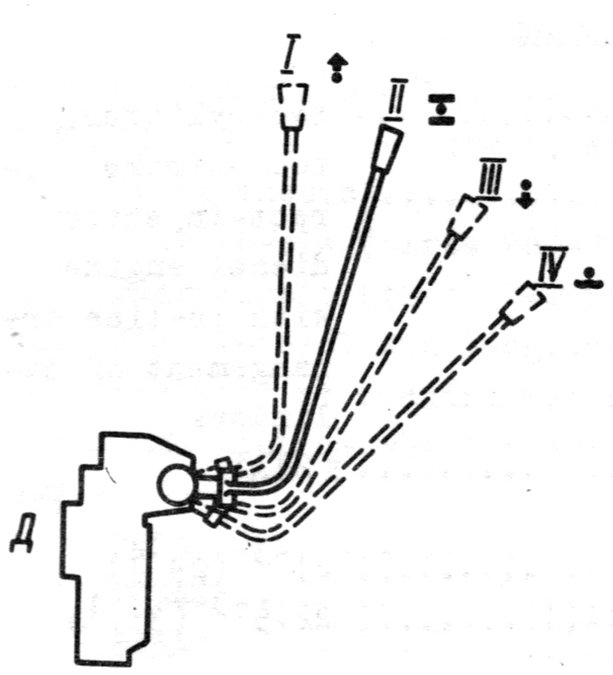

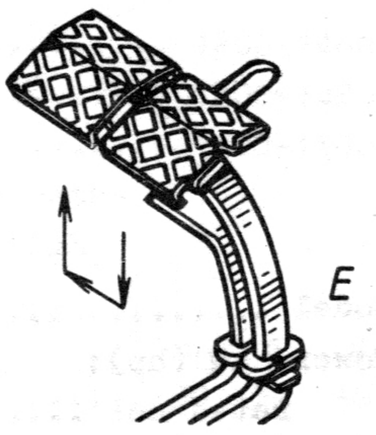

10 - differential lock pedal;
11 - step and gear shift lever;
12 - reverser control lever;
13 - brake pedal interlock strip;
14 - r.h. brake pedal;
15 - l.h. brake pedal;
16 - clutch pedal;
17 - decompressor control rod.

The tractor is turned by turning steering wheel 1. The direction of rotation of the steering wheel coincides with forward motion of the tractor. The coincidence is preserved in case of readjustment of the tractor for operation in reverse.



The clutch is released by depressing pedal 16. As the pedal is released, a spring makes it restore its initial position and the clutch is engaged.

All manipulations with the gears, doubler steps, reverse, drive pulley (engaging, disengaging, shifting) are possible only with the clutch thrown out.

The tractor has three operational speeds and one low speed. The two-step doubler, however, doubles the number of speeds. Before engaging a speed, be sure to shift the GB for a desired step.

To shift for a desired doubler step, move lever 11 forward and sideways according to the scheme. The lever is not retained - it is freely brought to the neutral (middle) position and the step remains engaged (the doubler is not disengaged but shifted). Then, by shifting the same lever sideways, a needed speed is engaged according to the scheme. If there is no need for shifting the doubler, it is enough to engage a needed speed.

The speeds are disengaged by shifting the lever to its neutral position.

The gears are shifted for forward and reverse running by shifting reverser control lever 12 to the left or right respectively according to the scheme.

If the tractor is rigged with a drive pulley, the same lever concurrently engages the pulley for CW or CCW rotation. (The pulley installed on the tractor always rotates as the tractor is in motion). The drive pulley reverse rotation is cancelled by shifting the lever to its middle (neutral) position.

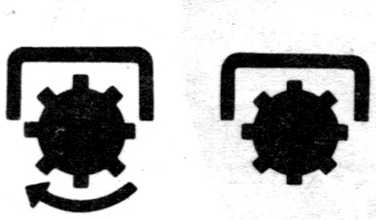

The PTO shaft is engaged by shifting lever 8 backward. As the lever is shifted forward, the PTO shaft is disengaged.

The controls which apply brakes to the rear wheels are pedals 14 and 15 and lever 5.

By depressing r.h. pedal 14 a brake is applied to the r.h. wheel, while the l.h. wheel is braked by depressing l.h. wheel 15. Interlocking of the pedals is effected by displacing strip 13 to the left. As a result, both brakes are applied concurrently. To unlock the pedals, proceed in the reverse order. The strip is fixed in the extreme left and right positions.

The wheels are unbraked as pressure on the pedals is discontinued. Springs make the pedals restore their initial position as they are released.



The brakes are applied as lever 5 is shifted backward as far as it will go. The lever is fixed automatically in this position. To release the brake, pull the lever backwards, depress button 4 and shift the lever forward as far as it will go.

In operation with a single-axle trailer 1ПТС -2Н, the hand brake, when applied, actuates the trailer braking cylinder too, so the tractor and trailer are braked simultaneously.

The engine crankshaft rotational speed is controlled by lever 7 and pedal 6. The speed increases as the lever is pushed forward and decreases as it is pulled backward. Fuel delivery is cut off and the engine is shut down with the lever pulled back as far as it will go.

The engine speed increases as pedal 6 is depressed. When released, the pedal is spring-driven to its initial position and the engine speed decreases. The crankshaft rotational speed is dependent on the lever setting.



The decompressor is on as rod 17 is pulled backward and off as it is pushed forward.



The differential is locked by depressing pedal 10. Lock the differential as the tractor is in rectilinear motion and one of the driving wheels slips. Release the clutch before locking the differential. As the pedal is released, a spring drives it to its initial position and the differential is unlocked.

The HLS pump may be actuated with the engine shut down or running at a low speed (up to 800 rpm).

Pull out knob 18 and turn lever 19 to the right to actuate the pump. As the knob is released, the lever is arrested while the pump operates. Proceed in the reverse order to stop the pump.

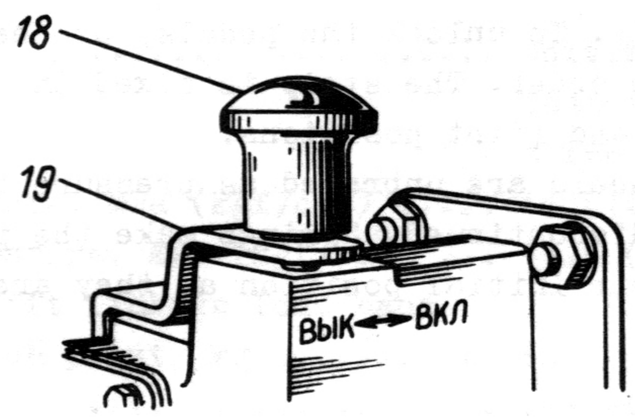

The main and remote hydraulic cylinders are controlled by levers 2 and 3 respectively. Both levers are manipulated in the same way.

The four positions of the levers are the following:

I - lift
II - neutral
III - lower
IV - floating

When the lever is set in position I, the linkage lifts the implement. As the lift is over, high pressure in the hydraulic system returns the lever to position II.

When the lever is set in neutral position II, the implement is held in its position.

As the lever is shifted to position III, the implement is lowered. As it reaches its lowest position, high pressure in the hydraulic system returns the lever to position II.

With the lever set in position IV, the hydraulic system mechanism is free to move by gravity and the implement follows the soil contour.

If levers 2 and 3 fail to return to position II from positions I and III, shift them by hand.

The hydraulic hook is opened by pulling on ring 9. The hook is spring-closed as the ring is released.

All the controls and their movements (except for the steering wheels) on the tractor adapted for operation in reverse remain essentially the same, hence their location relative to the operator is changed. For this reason, particular care must be taken in operation of the tractor upon adaptation.

5.2. Switches and Instruments

1 - dipswitch;
2 - horn button;
3 - turn indicator switch;
4 - preheater plug and starter switch;
5 - rear lamp switch;
6 - instrument board illuminating, marker and headlamp switch;
7 - warning lamp of battery switch position;
8 - oil temperature gauge;
9 - preheater plug warning lamp;
10 - ammeter;
11 - upper beam warning lamp;
12 - oil pressure gauge;
13 - turn indicator warning lamp;
14 - fuel level gauge;
15 - windshield washer switch;
16 - tachospeedometer
17 - battery switch.

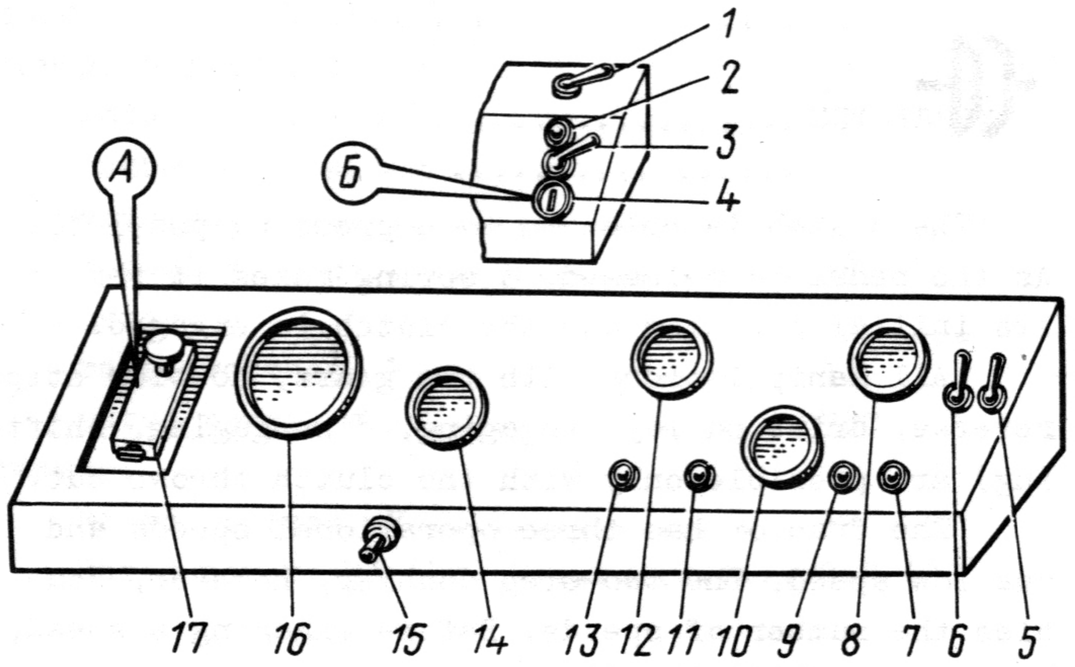

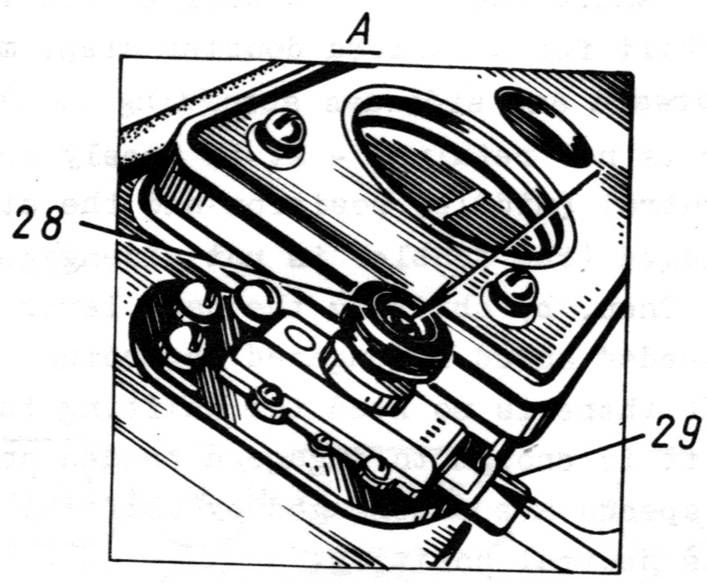

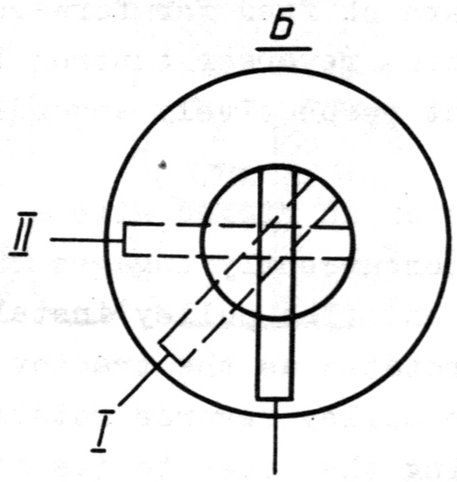



The temperature of oil in the hot engine oil line must be maintained in the range of 40-120 °C. The oil temperature gauge reading must not be in excess of 120.

In the hot engine, pressure of oil at the rated crankshaft speed must be in the range of 0.15-0.35 MPa (1.5-3.5 kgf/cm^2). As the engine is running, the pointer of oil pressure gauge 12 may read, for short periods of time, values in excess of the aforesaid limit (for instance, if the engine is cold or runs at the minimum steady speed), it must not depart from the green zone.

Avoid burning up fuel. Shut down the engine before fuel level gauge 14 indicates the empty tank, otherwise the engine start-up will be impeded due to air ingress into the fuel system. Each scale division corresponds to 1/4 of tank capacity.

A measuring rule (to be found under the filling neck cap) allows for a more accurate assessment of availability of fuel in the tank.

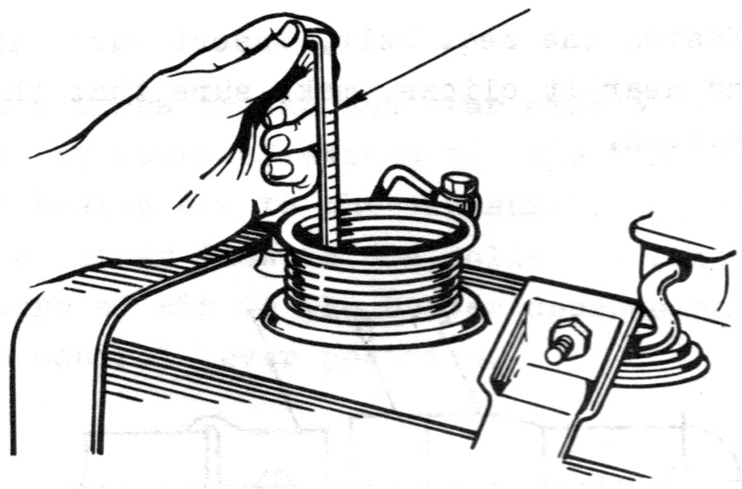

Outer scale 18 in the bottom part of the tachospeedometer shows the engine rpm (derived by multiplication by a factor of 100). Mark 19 corresponds to the rated engine crankshaft speed.

Inner scale 20 in the bottom part of the tachospeedometer shows the PTO shaft speed (derived by multiplication by a factor of 100).

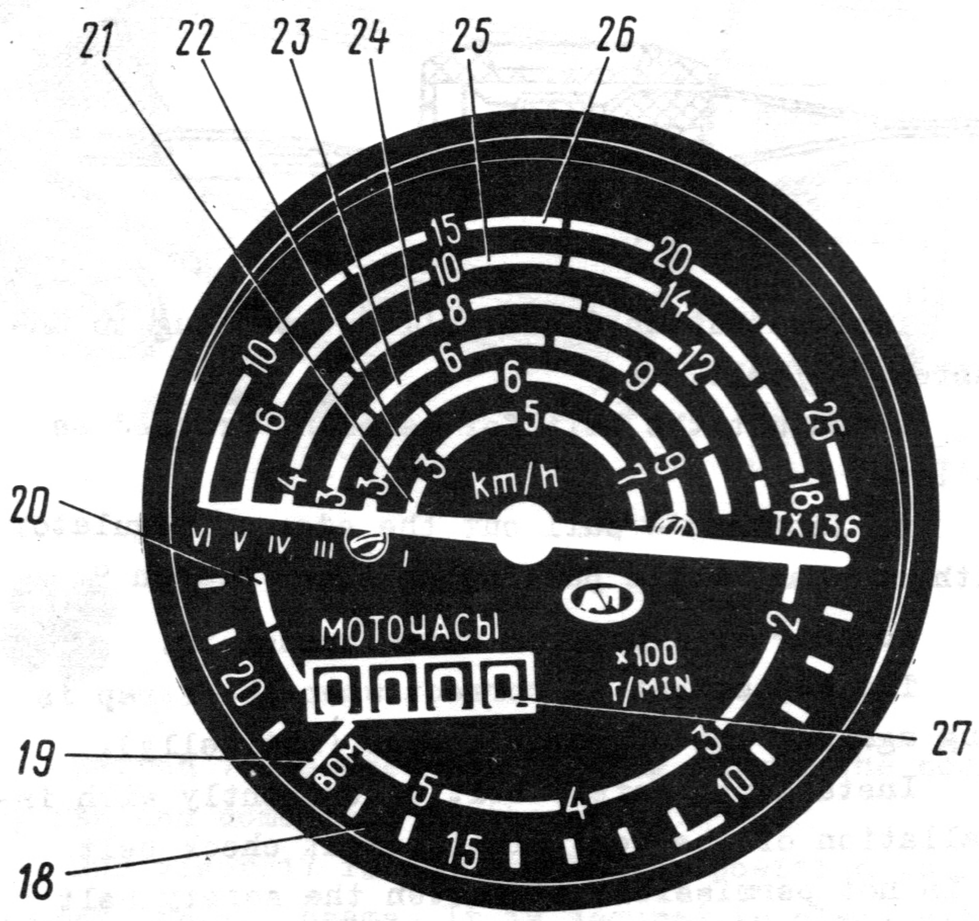

Scales 21, 22, 23, 24, 25, 26 in the upper part of the tachospeedometer are for the tractor speed at the 1st, 2nd, 3rd, 4th, 5th, and 6th speeds respectively. The tachospeedometer readings are the most accurate when the rear wheels have 280-711 mm (10.00-28) tires.

The counter of engine operating hours in the bottom part of the tachospeedometer shows the time of engine running (hr) at the rated crankshaft speed (1800 rpm). The time is shortened with lower rpm and vice versa.

If the engine is not fit with the tachospeedometer, the engine operating hours counter location is that where the tachospeedometer drive is to be located.

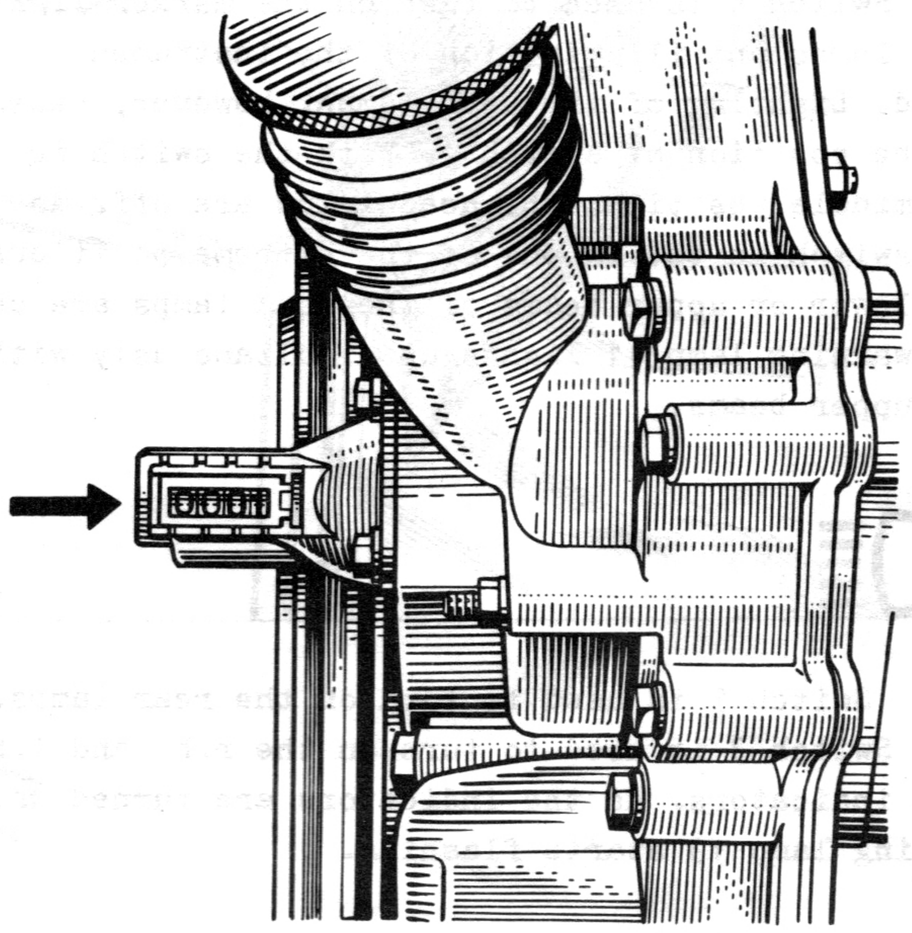

The tachospeedometer and gauges of level of fuel and temperature of oil are illuminated as the head lamps or marker lights are turned on.

The storage battery is grounded by depressing button 28. As the button is depressed, warning lamp 7 on the instrument board lights up and the pointer of ammeter 10 deflects to the left "-" indicating that the storage battery is being discharged. Upon start-up of the engine, the ammeter pointer deflects to the right "+" indicating that the battery is being charged and the warning lamp is turned off. The lamp is also on in case of breakage or considerable slippage of the alternator fan drive belt.

As the storage battery is charged completely, the pointer shows "0".

The battery is disconnected from the frame by depressing button 29.

There are three positions of the starter switch. As the switch is turned clockwise through 45° to position I, the preheater plugs are energized and control lamp 9 is on. The starter is turned on and the lamp is turned off by turning

the switch through another angle of 45° to position II. The starter can be turned on provided that the reverser control lever is set for neutral.

As the switch is released, a spring drives it back to its initial "0" position.



The horn is sounded by depressing button 2.



Switch 6 is used to turn on the marker lights, head lamps and illumination of the instrument board. Lighting of the head lamps, however, depends on the position of switch 1. With the switch in the middle position, the head lamps are off. As the switch is set in one of the extreme positions, the lower or upper beams of the head lamps are on and warning lamp 11 lights up simultaneously with the upper beams.



Switch 5 is used to turn on the rear lamps.

Switch 3 is used to turn on the r.h. and l.h. turn indicators. As the indicators are turned on, warning lamp 13 starts flashing.

5.3. Operator's Workplace

The seat is adjusted to suit the operator's weight by turning screw 3. As the screw is rotated clockwise, the seat suspension is made less rigid and vice versa. When adjusting the seat, consideration must be given to both the operator's weight and road conditions. If the country is too rugged, the seat should be made less rigid.

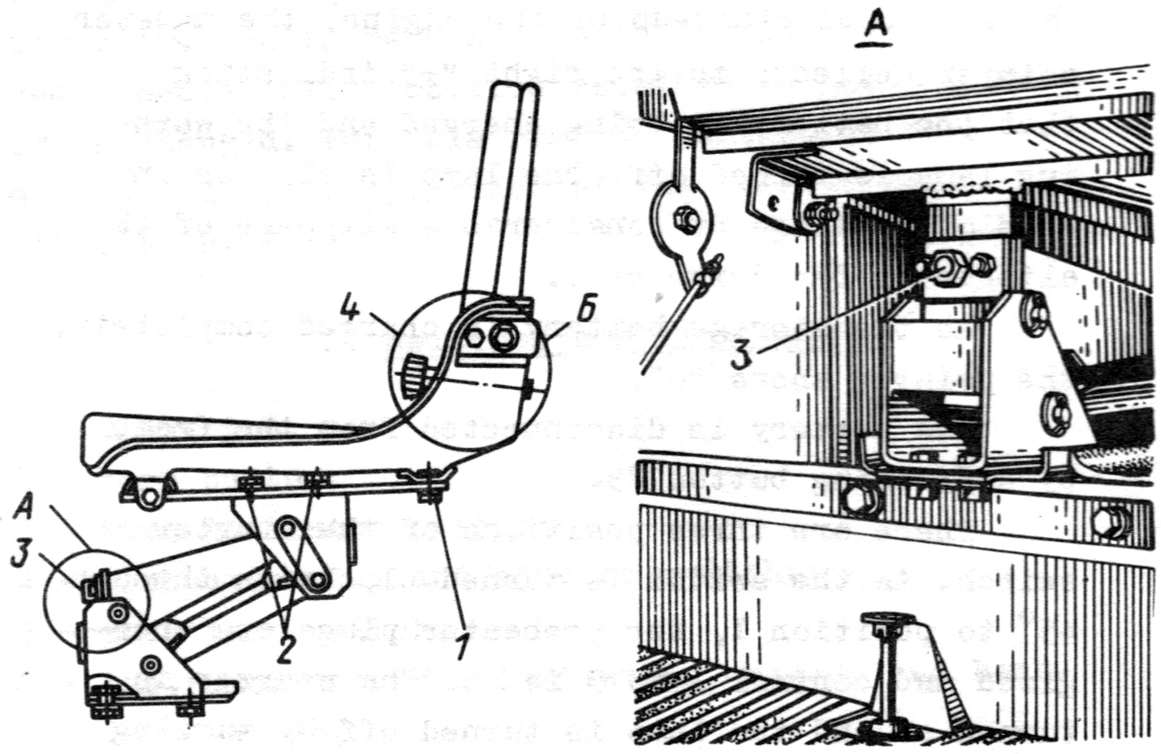

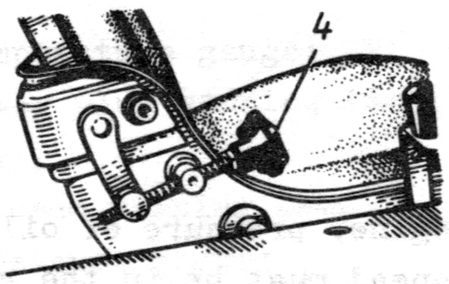

The seat back is adjusted for tilt by rotating knob 4 clockwise to incline the seat backward.

For fore-and-aft adjustment of the seat to suit the operator's height, proceed as follows:

- undo nut 1 and fold the seat forward;
- loosen two bolts 2;
- displace the seat as needed;
- tighten bolts 2 and recline the back in place.



To fasten the seat belt, insert tub 7 into lock 5 and hear it clicks, make sure that the belt is not twisted.

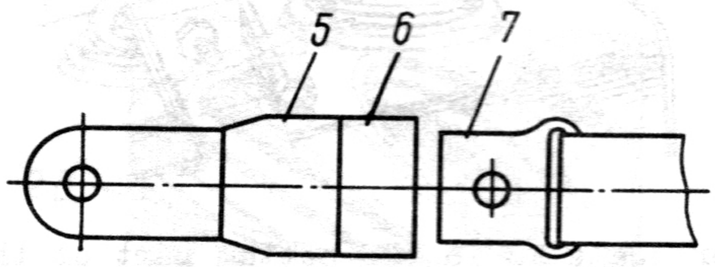

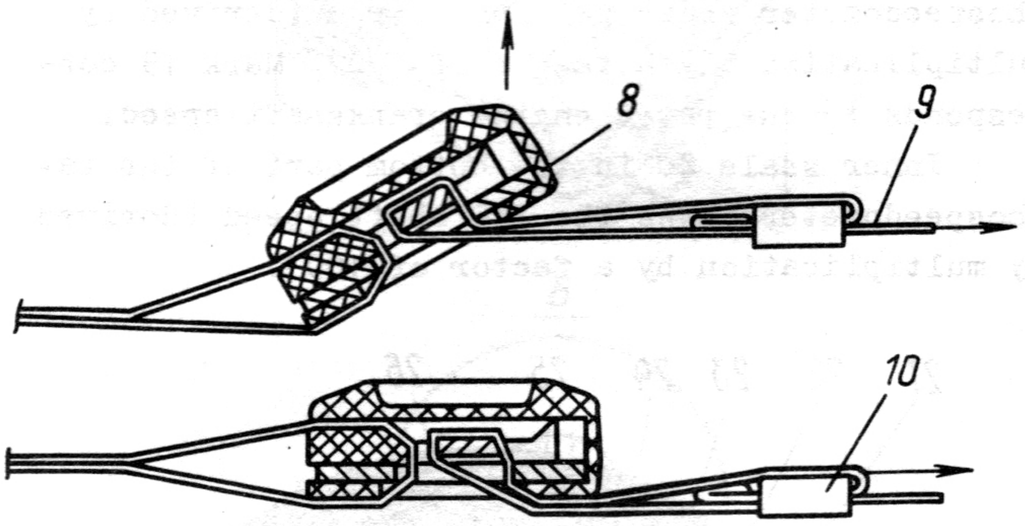

Depress button 6 and pull out the tug to unfasten the belt.

To adjust the belt for tension, proceed as follows:

to lengthen - pull out the edge of regulator 8 with one hand while pulling on inner branch 9;

to shorten - pull on outer branch 10.

The adjustment is correct when the strap is snug against the operator's hips (not belly).

Install the safety belt concurrently with installation of the seat displacement check belt. It is not permissible to fasten the safety belt when operating the tractor without the check belt.

In cold weather, open the cab heater throttle by pushing lever 11 forward upon heating of oil by repeated setting the control valve lever to the LIFT and LOWER positions.

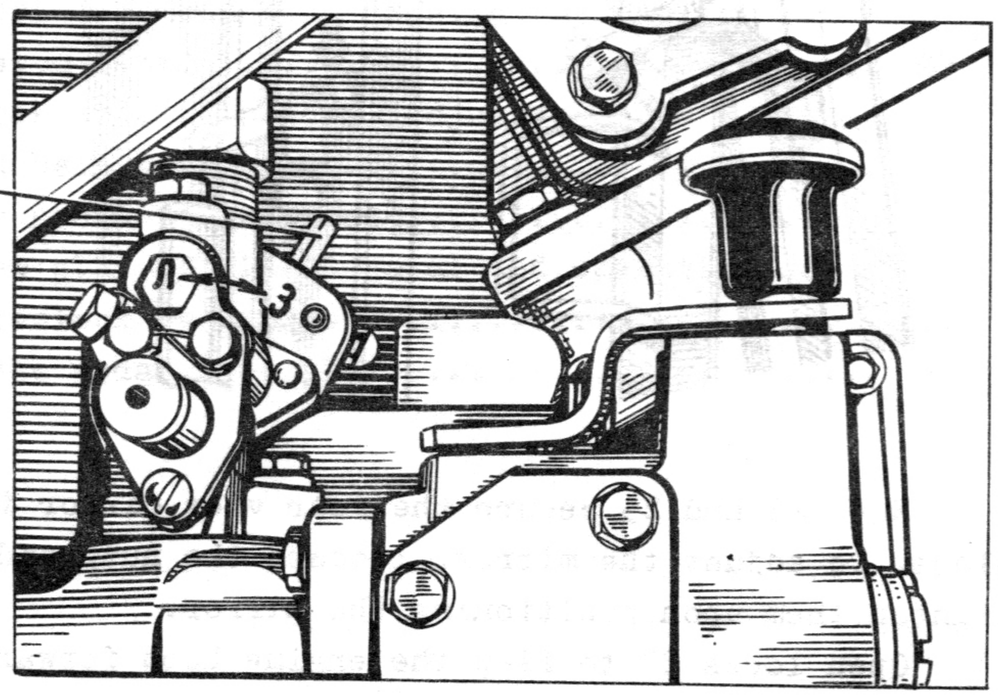

The cab heater fan and rear window heater are turned on by means of switch 12. The fan provides flows of heated air to the windshield and operator's legs. The latter flow is controlled by gate 13. The temperature of air in the heater depends on the throttle control lever position.

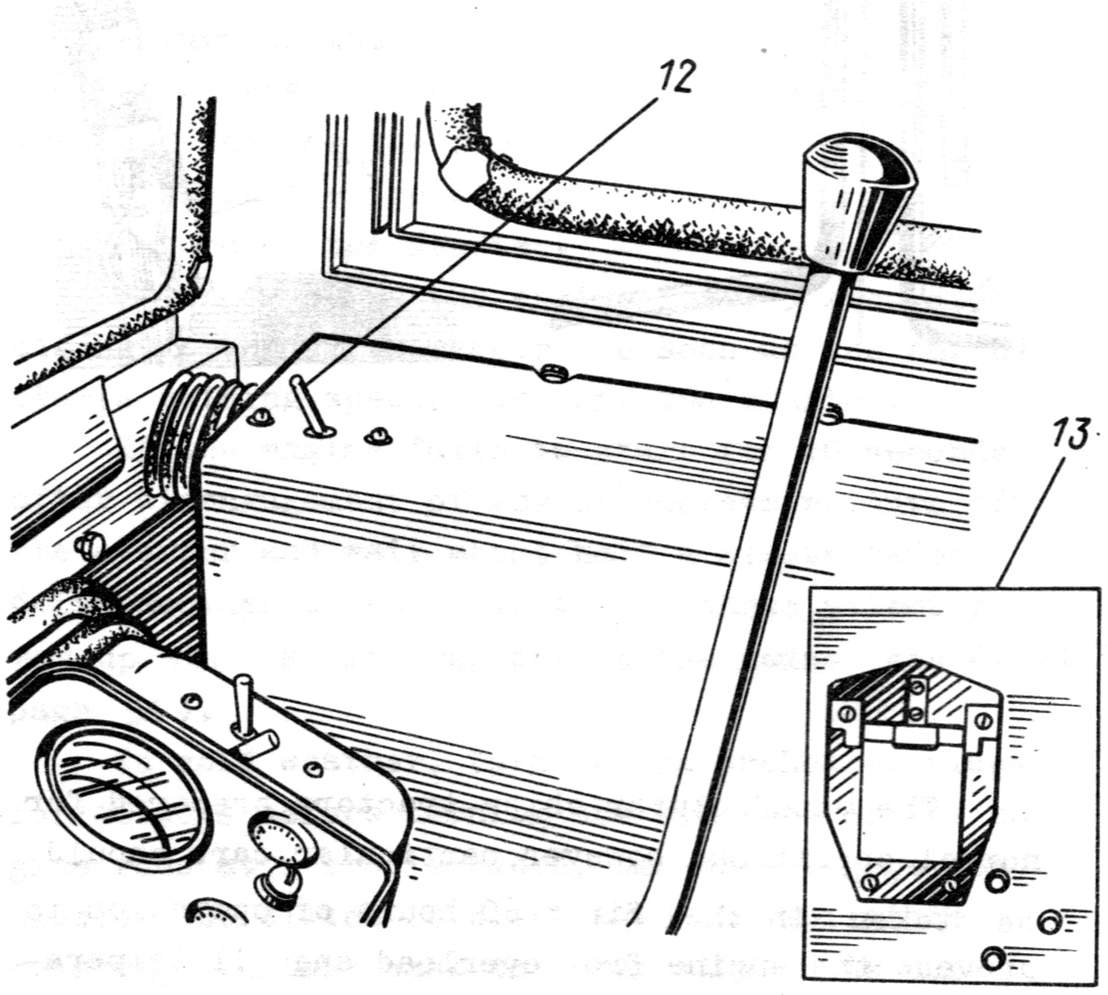

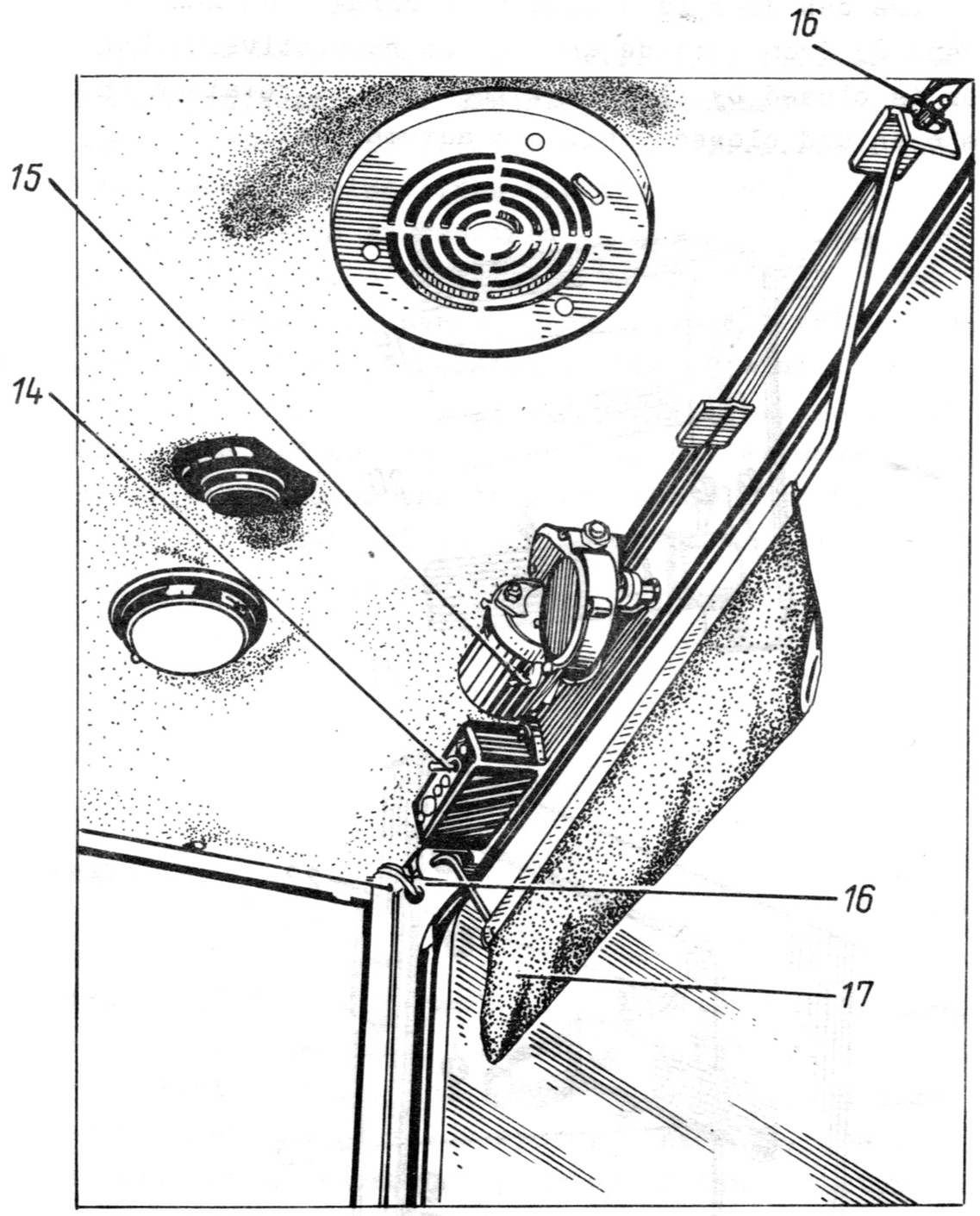

The windshield wiper is turned on by means of switch 15. The windshield washer is actuated by depressing button 15 (page 12).

The rear window wiper is hand-operated by means of handle 18.

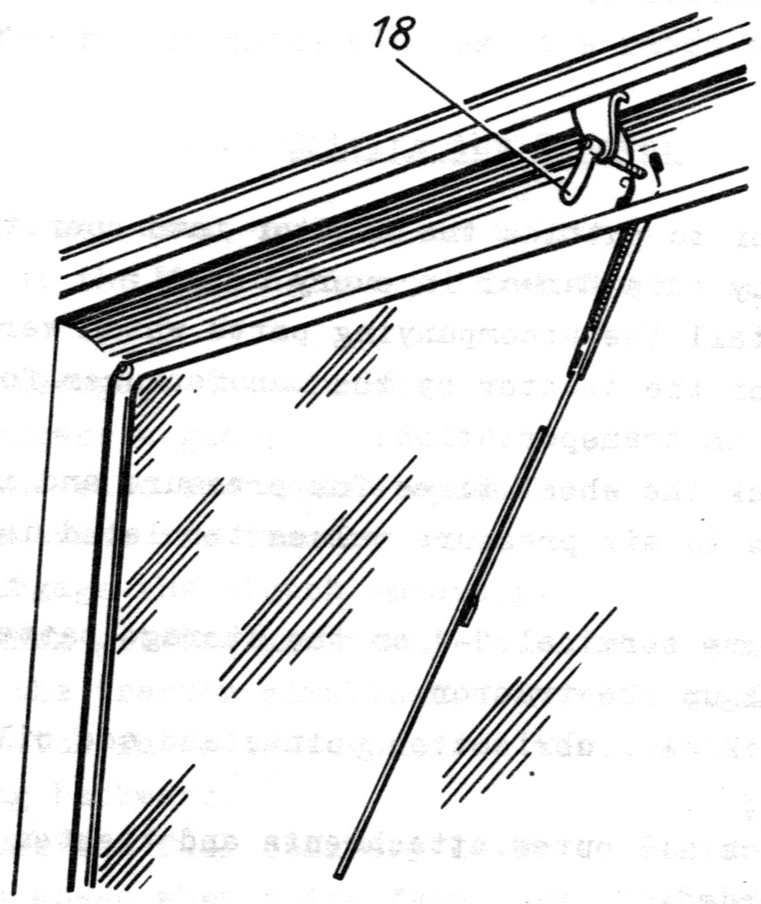

Switch 14 is used for turning on/off the cooling fan and dome lamp in the cab.

Sun visor 17 is adjustable for position to intercept the sun beams. It is secured in place with wing nuts 16.

The cab door is opened by turning down handles 21 and 23 from outside and inside respectively. The door is closed by slamming. The door is retained in the open and closed positions automatically.

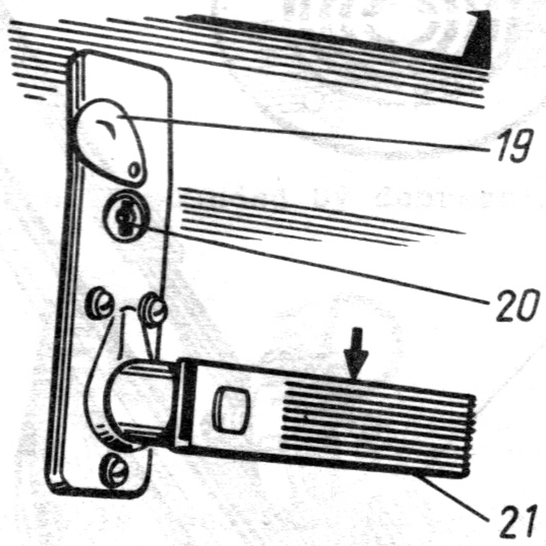

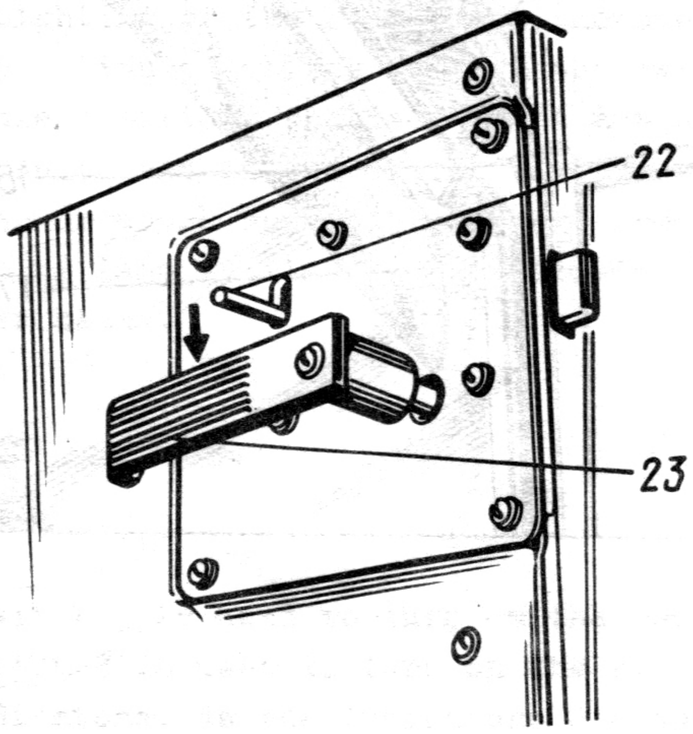

The door is locked by turning a key inserted in keyhole 20 counterclockwise. From inside, the door is locked by upward displacement of latch 22. Flap 19 protects the keyhole from ingress of dust and moisture.

Latch 24 is used to secure the emergency manhole in the open (a) and closed (b) positions.

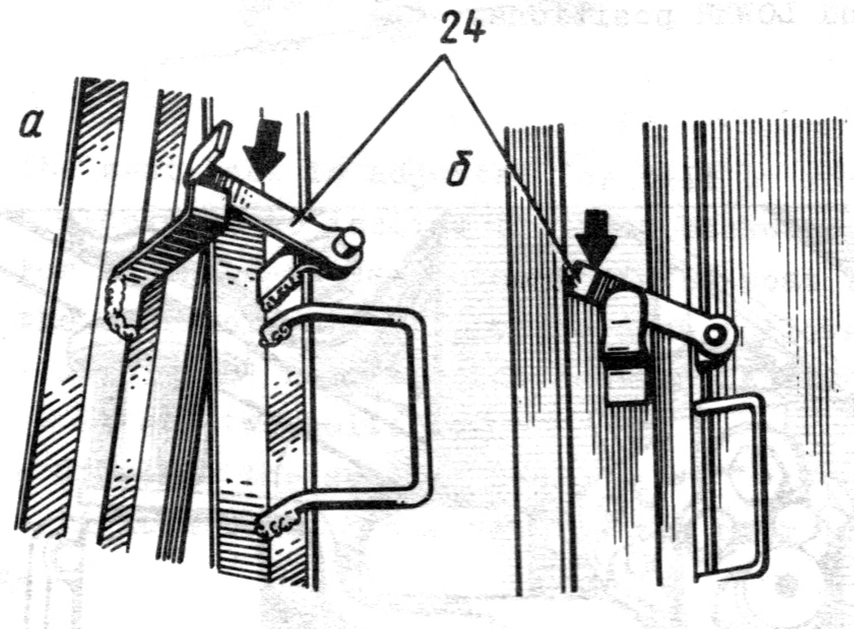

Nuts 26 and 25 secure the rear view mirror in place. To adjust the mirror, looosen the nuts and tighten them upon positioning the mirror.

Open locks 27 to flap the engine hood forward.

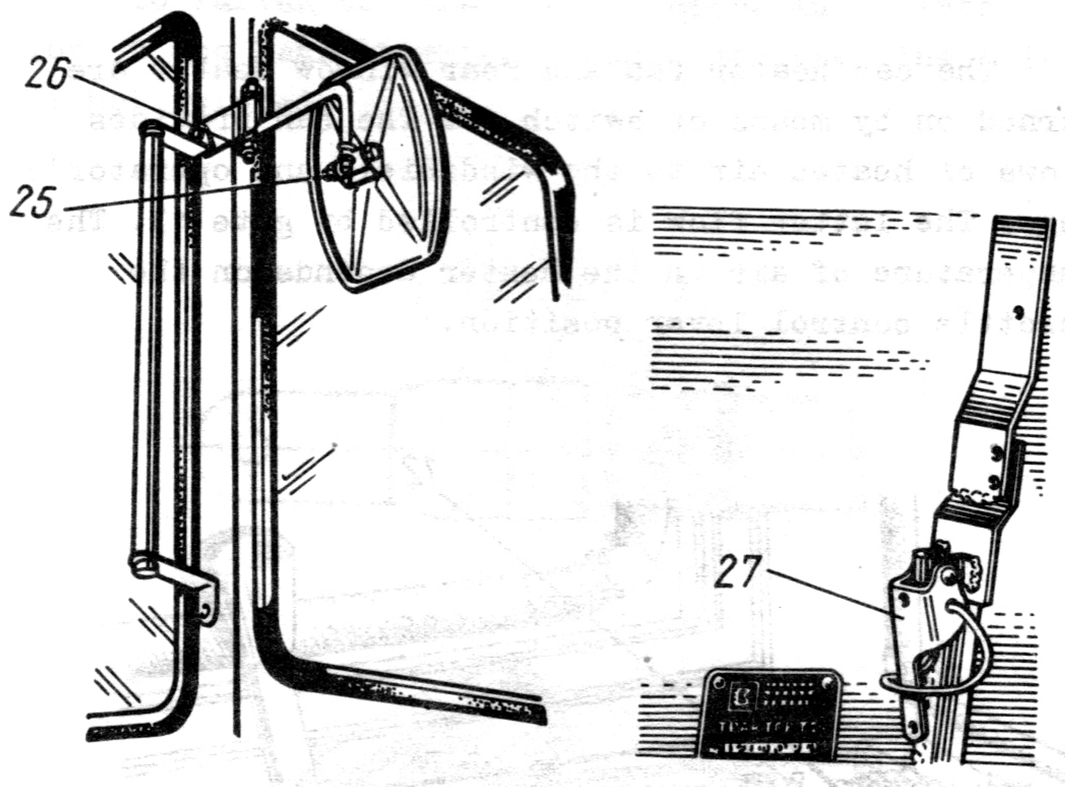

6. BREAKING IN

Prior to putting the tractor into operation,
study this Manual in every detail;
install the accompanying parts which were not mounted on the tractor by the manufacturer for convenience in transportation;

check the wheel tires for pressure and inflate the tires to air pressure values tabulated in Table 5;

secure terminal "-" on the storage battery;

fuel up the tractor;

check all lubrication points and add oil (see Table 5);

check all outer attachments and tighten them up if needed;

The manufacturer ships tractors prepared for normal operation, however particular care should be taken in the first 60 hours of operation to prevent the engine from overload and oil temperature from exceeding the prescribed level.

After 60 hours of operation:

Wash (clean):

	Page
ribs of heads and cylinders	43
hydraulic mechanism breather	47
engine oil filter	46
ventilation holes in plugs of storage batteries	54
terminals and wire clamps	54

	Page
Wipe dry the storage battery upper surface ..	54
Replace oil in:	
crankcase	46
fuel pump casing	45
main transmission case	48
final drive cases	48
hydraulic mechanism housing (hydraulic system tank)	47
Check and, if needed, adjust:	
fan belt tension	50
air pressure in tires	55
free play of clutch pedal and operation of interlock mechanism	51
brake pedal free play	51
valve-to-rocker clearances	53
Remove injectors for checking and adjustment	45
Check suction pipe-lines for tight seal, eliminate leaks as required	46
Check the level of distilled water in storage batteries. If needed, top off the level .	54
Apply a coat of petrolatum to the terminals and wire lugs	54
Check and, if needed, tighten up all external attachments of the tractor assembly units (except for nuts of anchoring studs securing the cylinders and heads).	

7. OPERATION

7.1. Starting and Shutting Down the Engine

Before starting the engine:

- make sure that the gear shift lever, reverse control lever, HLS and PTO control levers are in the neutral position;
- close the battery switch;
- turn on the decompressor;
- set the fuel delivery lever for full delivery and depress the fuel feed pedal;
- disengage the clutch;
- turn on the starter.

After cranking the engine for 3-5 seconds, disengage the decompressor. As soon as the engine starts gaining speed, turn off the starter.

If the engine fails to start for 10 seconds after disengagement of the decompressor, turn off the starter and wait about half a minute before doing another attempt. If two or three attempts end up in a failure, detect the cause (see page 56).

In cold weather, turn on the preheater plugs for 40-60 s before turning the starter. As the engine runs at a stable speed, smoothly engage the clutch. The clutch is disengaged to facilitate cranking, in this case the transmission is disengaged.

The decompressor may not be engaged and the clutch may not be disengaged if the engine to be started and the transmission are hot or the weather is warm. The fuel delivery lever may be set for minimum feed, and while the starter runs the speed may be slightly increased by means of the fuel feed pedal.

Upon starting, warm up the engine at a moderate speed while watching readings of the instruments. Make sure that the lighting system, horn and control mechanisms are in good repair.

Avoid letting the engine run for a long time at no load and at a low speed. Otherwise, the likely consequences are gumming of the injector atomizers, deposition of gum on the heads and pistons, sticking of the piston rings.

To shut down the engine, cut off fuel by pushing the fuel delivery lever forward as far as it will go and open the battery switch. Pull out the starter switch key.

Never attempt shutting down the engine by engaging the decompressor (except for emergency cases when the engine runs racing). The use of decompressor as an aid to shut down the engine may entail burning of the air cleaner filtering elements and failure of the engine.

Do not shut down the hot engine immediately after relieving it of load. Let the engine run idle for two or three minutes at a rated speed.

7.2. Driving the Tractor

To get away, proceed as follows:

set the fuel delivery lever for a low engine speed;

disengage the clutch;

engage a gear;

increase the engine speed;

unbrake the tractor;

engage the clutch smoothly.

When getting under way to climb a grade, unbrake the tractor simultaneously with engaging the clutch in order to prevent the tractor from rolling backward.

Use the fuel delivery lever to control the engine speed when doing farm work. The pedal of-

fers a greater convenience in controlling the speed when the tractor is used for transport purposes.

Do not keep your foot on the clutch pedal to avoid premature wear of its bearing.

To shift gears, proceed as follows. Disengage the clutch and decrease the engine speed simultaneously. Shift gears, as described above, on the tractor stopped. Shifting gears on the tractor on the go is not permissible.

To stop the tractor: release the clutch concurrently with decreasing the engine speed, apply the brake, disengage the gear, engage the clutch, apply the hand brake.

Before stopping the tractor, shut down the engine and engage one of the low gears. When stopping the tractor on upgrade, engage a low gear and shift the reverse for RM (or for FM if the tractor is stopped on downgrade.

Observe traffic rules when driving on a road. Before starting off, make sure that all the light and audible warning signal systems operate properly. Adjust the rear view mirror to suit the road conditions.

When towing a cargo load with the use of a flexible rope, be sure to take up the slack gradually. Trailers to be towed must be rigged with brakes.

At night, do not turn on the rear lamps when driving on a road. Shift the head lamps for lower beams when approaching a vehicle coming from the opposite direction. The lamps must be properly adjusted.

Interlock the differential in case of rear driving wheel spinning. Unlock the differential before starting turns, especially sharp ones.

Slow down before doing sharp turns. Try to avoid sharp turns under load. If a sharp turn cannot be avoided, brake the right side of the tractor when doing a right turn and vice versa.

Be particularly careful when driving on a slick road. Drive at one of the low speeds and brake the tractor without disengaging the gear. In case of sidewise skidding, turn the steering wheel to the side of skid.

8. OPERATING AND AUXILIARY EQUIPMENT

8.1. Mounted Equipment

The attachment of links 12 and 21, length of braces 5 and 23, and installation of central link 8 and lift levers 1 and 2 are dependent on the tractor setup. The recommended height, wheel track and tire pressure adjustment values for combining the tractor with a variety of farm machines and implements are tabulated on page 36 .

The tractor may be ganged up with trailed implements with draft resistance not exceeding 7930 N (793 kgf), or mounted implements weighing 600 kg or less. The hydraulic system is operable at oil temperatures from 20 to 60 °C.

Prior to mounting an implement, familiarize yourself with operating instructions for the implement and this manual. Farm implements may be mounted directly on the linkage or use may be made of a CA-1 snap hitch.

By means of two coupling tubes 7 (the second tube is supplied with the tractor) the central link is adjustable for length from 420 to 740 mm.

Rotate nuts 16 to adjust chains 15 and 17 for length (after the implement is lifted) to insure that side swing of the implement does not exceed 20 mm in either side. Fix the nuts with check nuts 14. The chains must sag freely as the implement is lowered for work.

For direct mounting of an implement on the linkage, proceed as follows:

backtrack the tractor to the implement to lead joints 18 to pins 20 on the implement frame;

stop and brake the tractor;

set the hydraulic control lever to FLOATING (position IV);

connect joints 18 with pins 20, secure the attachments with catch pins 19;

using a tommy bar inserted in hole 6 rotate the tube to bring closer rear joint 9 of the central link, fasten it to the implement upper point using pin 10 and secure the attachment with catch pin 11.

The final adjustment of mounted equipment is to be done in the process of work as prescribed by the implement operating instructions.

To enable wide-coverage machines to follow the field contour, the lift rods should be telescopically connected to the lower links. For this purpose, undo check nut 4, install stops 3 at a distance of 50 mm and lock them using check nuts.

In cases when movement of the mounted machine working members is to be in strict conformity with the tractor movement during the straight-ahead running, the lower links must be interlocked upon attachment of the implement to them. To do this,

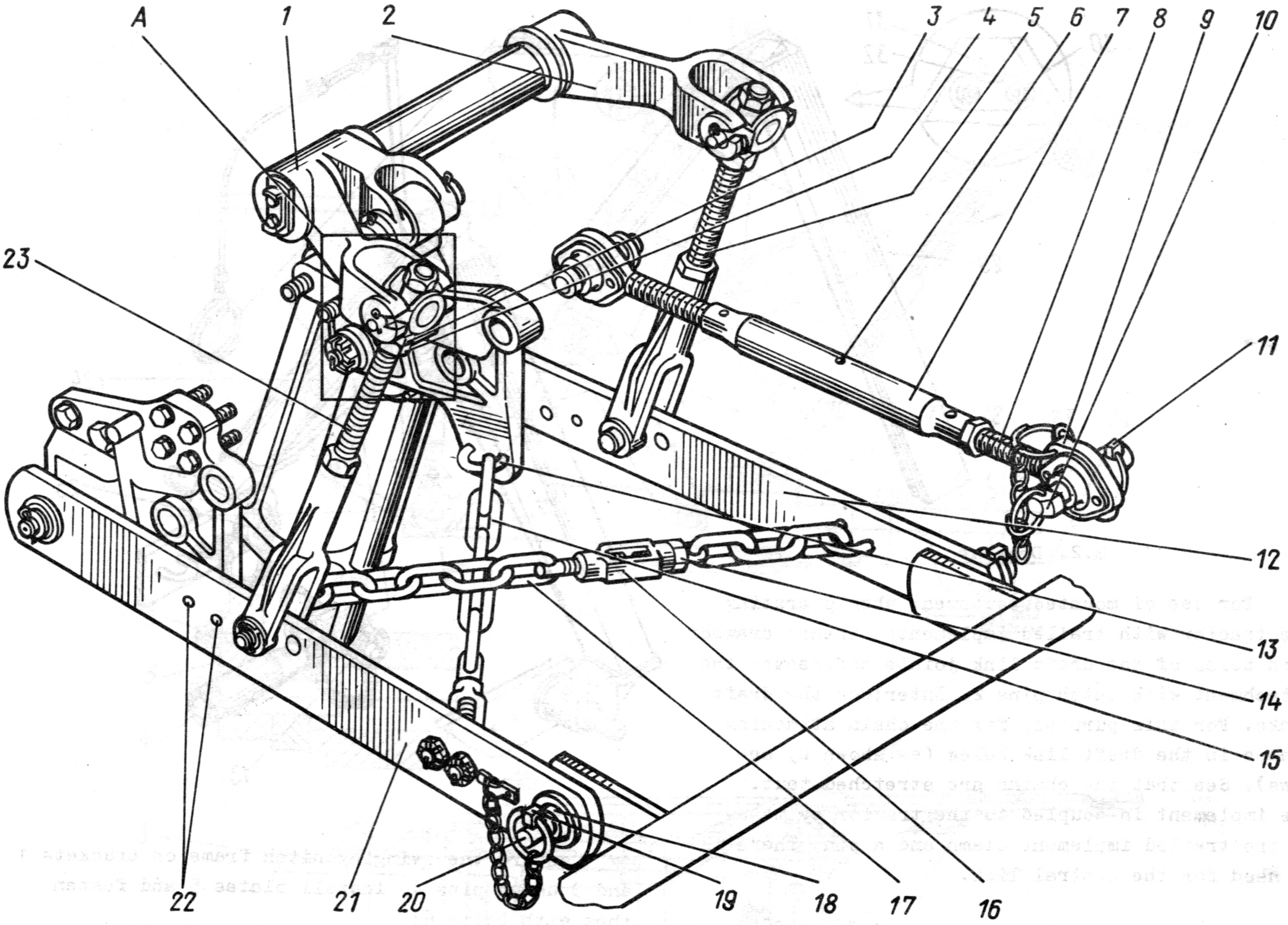

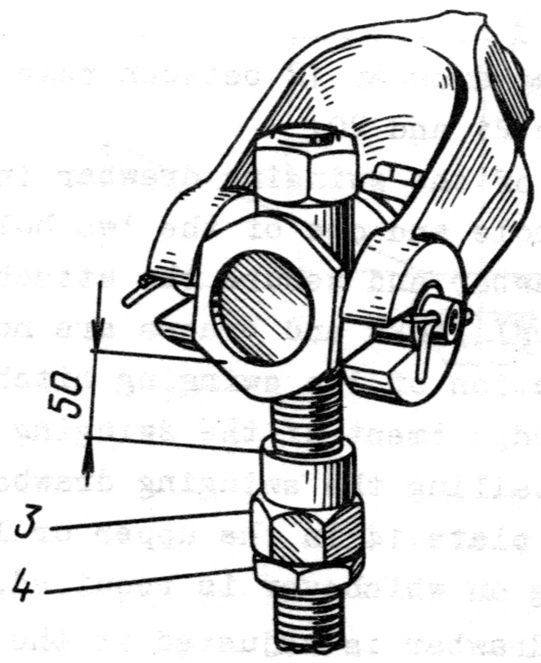

transfer chain attaching clamps 13 to holes 22 and see that the chains are stretched taut.

When combining the tractor with an implement operating with the remote cylinder, follow the implement operating instructions.

The snap hitch CA-1 is designed for mounting farm machines on the tractor by the operator from his seat in the cab. Frame 24 of the snap hitch, however, is to be mounted on the tractor prior to coupling farm machines to it.

The frame is fastened to the lower links by means of pins 25 (in the same way as the implement is mounted), and to the central link by the aid of round holes 26 or oval holes 27. Normally, pin 13 is used to connect the central link to oval hole 27. With such connection, frame 24 is in the inclined position relative to the tractor which makes the mounting of a farm machine much easier. If the ground clearance is not sufficient or the tools of the mounted farm machine operate irregularly, connect the central (upper) link to the round holes.

For coupling the tractor to a farm machine with the aid of the snap hitch, proceed as follows:

lower the lift linkage and backtrack the tractor to insert snap hitch frame 24 in the space of lock 29. The pawl will enter slot 31 to fix the implement in the mounted position.

For implements to be mounted on the given tractor for the first time, insure a tight coupling by using eccentrics 30 to set a minimum clearance between stop 32 and the pawl tip.

For uncoupling the mounted farm machine from the tractor, use handle 28 to pull on ring 33 for withdrawal of the pawl from slot 31 and lower the lift linkage.

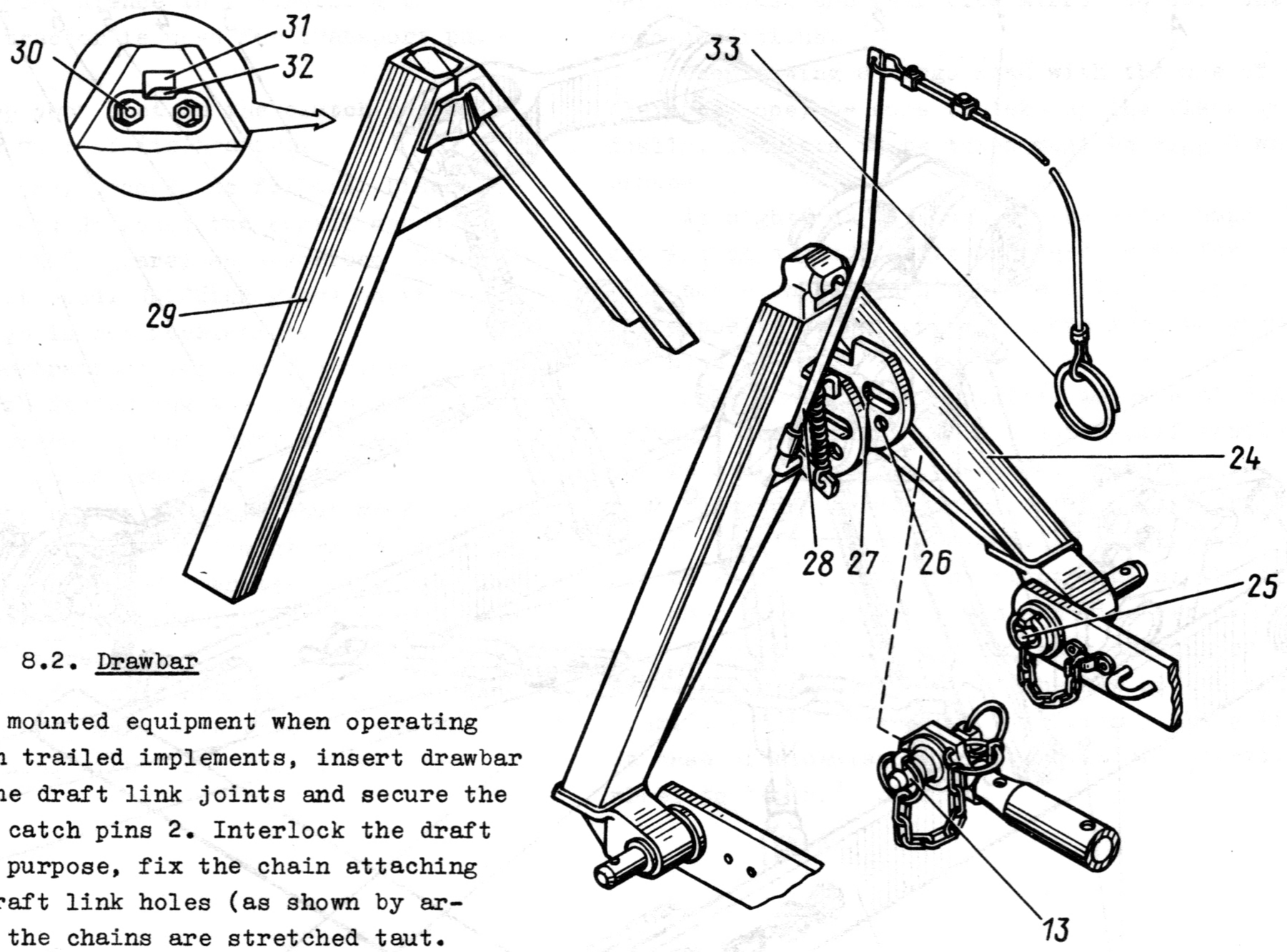

8.2. Drawbar

For use of mounted equipment when operating the tractor with trailed implements, insert drawbar 1 in holes of the draft link joints and secure the attachment with catch pins 2. Interlock the draft links. For this purpose, fix the chain attaching clamps in the draft link holes (as shown by arrows). See that the chains are stretched taut. The implement is coupled to the tractor by means of the trailed implement clamp and a pin. There is no need for the central link.

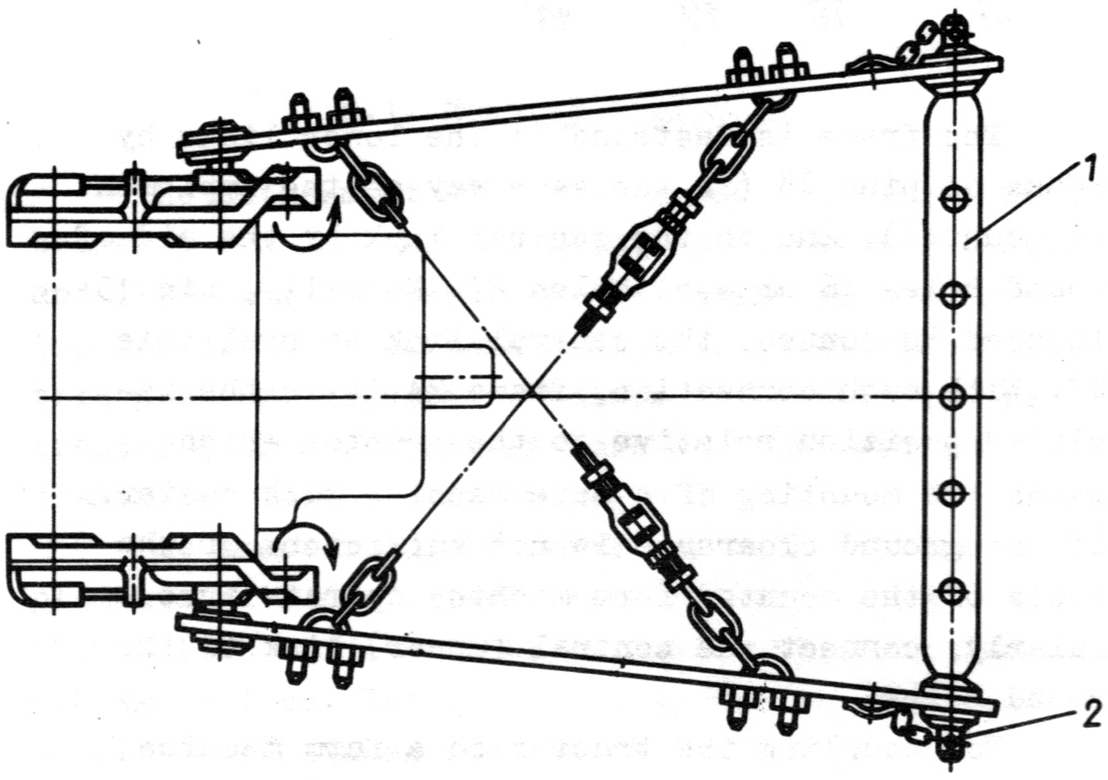

8.3. Swinging Hitch

Besides the drawbar, a swinging hitch may be installed on the tractor for coupling it with trailed farm machines. Convert the tractor to the medium or low setup before installing the swinging hitch.

For installing the swinging hitch on the tractor, do the following:

raise the lift linkage to the extreme upper position;

detach chains 16 and 18 from brackets 1 and 3;

secure the swinging hitch frame on brackets 1 and 3 using pins 4, install plates 5 and fasten them with bolts 6;

install braces 8 and secure them with bolts 9;

use clamps 10 to attach front ends of the chains to plates 11;

insert swinging drawbar 12 between rear and front cross members 21 and 20;

insert axle 2 of the swinging drawbar in the front cross member hole and one of the two holes in the swinging drawbar and secure the attachment. The draft and central links and braces are not needed for installation of the swinging hitch.

The vertical adjustment of the swinging hitch is effected by installing the swinging drawbar with its clevis-forming plate 14 in the upper or lower position, depending on whichever is required.

The swinging drawbar is adjusted in the longitudinal direction by resetting of the axle in the front or rear hole in the swinging drawbar.

Laterally, the swinging drawbar is adjusted by means of holes in the rear cross member providing five different positions of the swinging drawbar relative to the tractor center line. In each position the drawbar is fixed with pins 17.

The swinging hitch is optional. Before placing an order for the swinging hitch, make sure that brackets 1 and 3 have holes 7 and holes for bolts 9. If the holes are lacking, simultaneously order brackets allowing for installation of the swinging hitch.

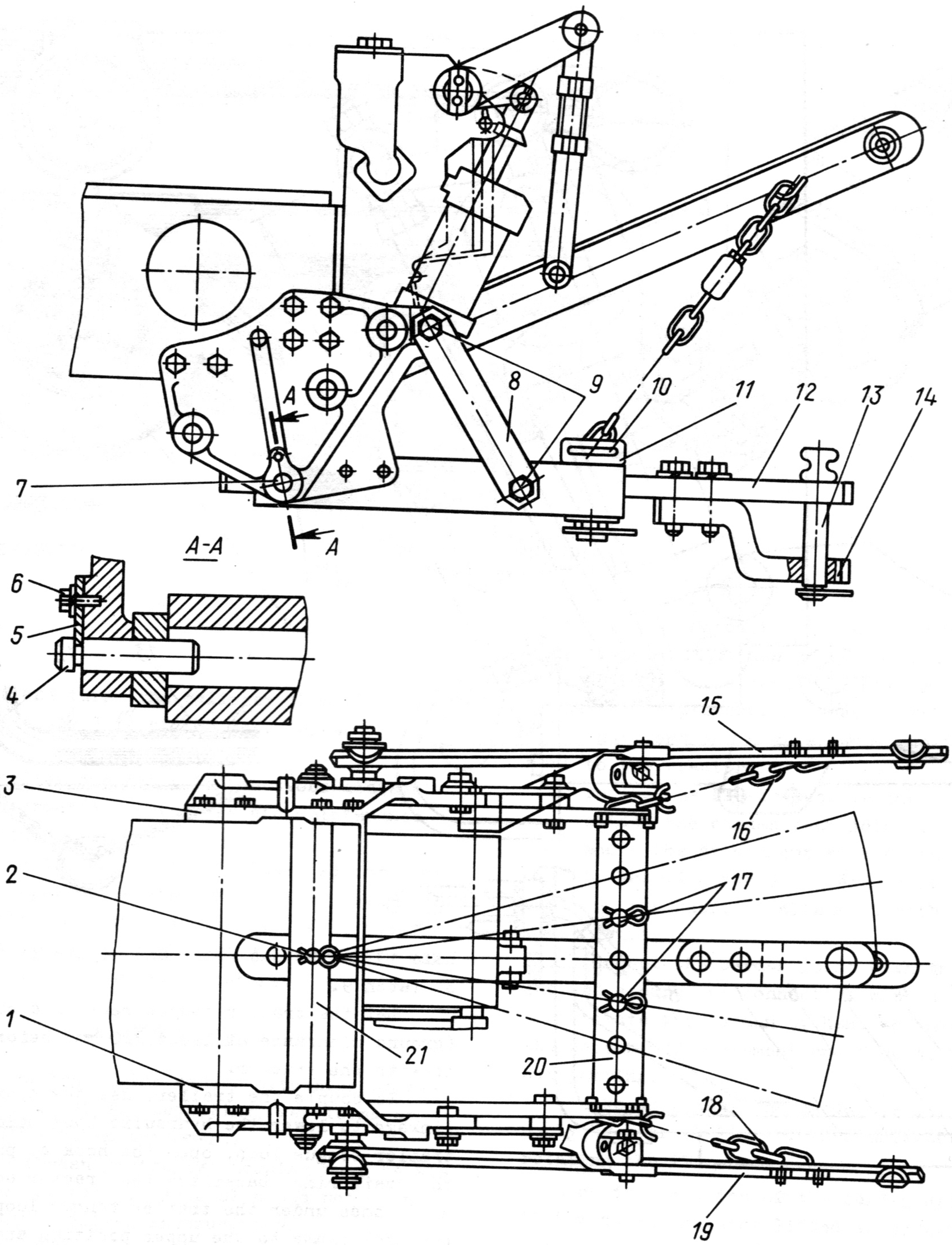

8.4. Hydraulic Hook

The tractor may be equipped with a hydraulic hook designed to allow the operator to couple and uncouple the trailer without leaving his heat.

Before installing the hook, rearrange the tractor to medium setup and set the front wheel and rear wheel track to 1400 and 1500 mm respectively.

In case of operation of the low setup tractor with the hydraulic hook, to avoid overturning of the tractor due to jacking up, limit the LDL stroke of the lift cylinder rod to 90 mm (tires 95-32") or 60 mm (tires 10-28"). The stroke should be measured with the hydraulic system lifted to the uppermost position.

To install the hydraulic hook, proceed as follows:

remove the central link;

remove the draft links with check chains;

instead of the draft links, install frame 6 of the hydraulic hook so that the holes in the frame are in register with the front holes in brackets 7;

through the holes in the frame, insert pins 2

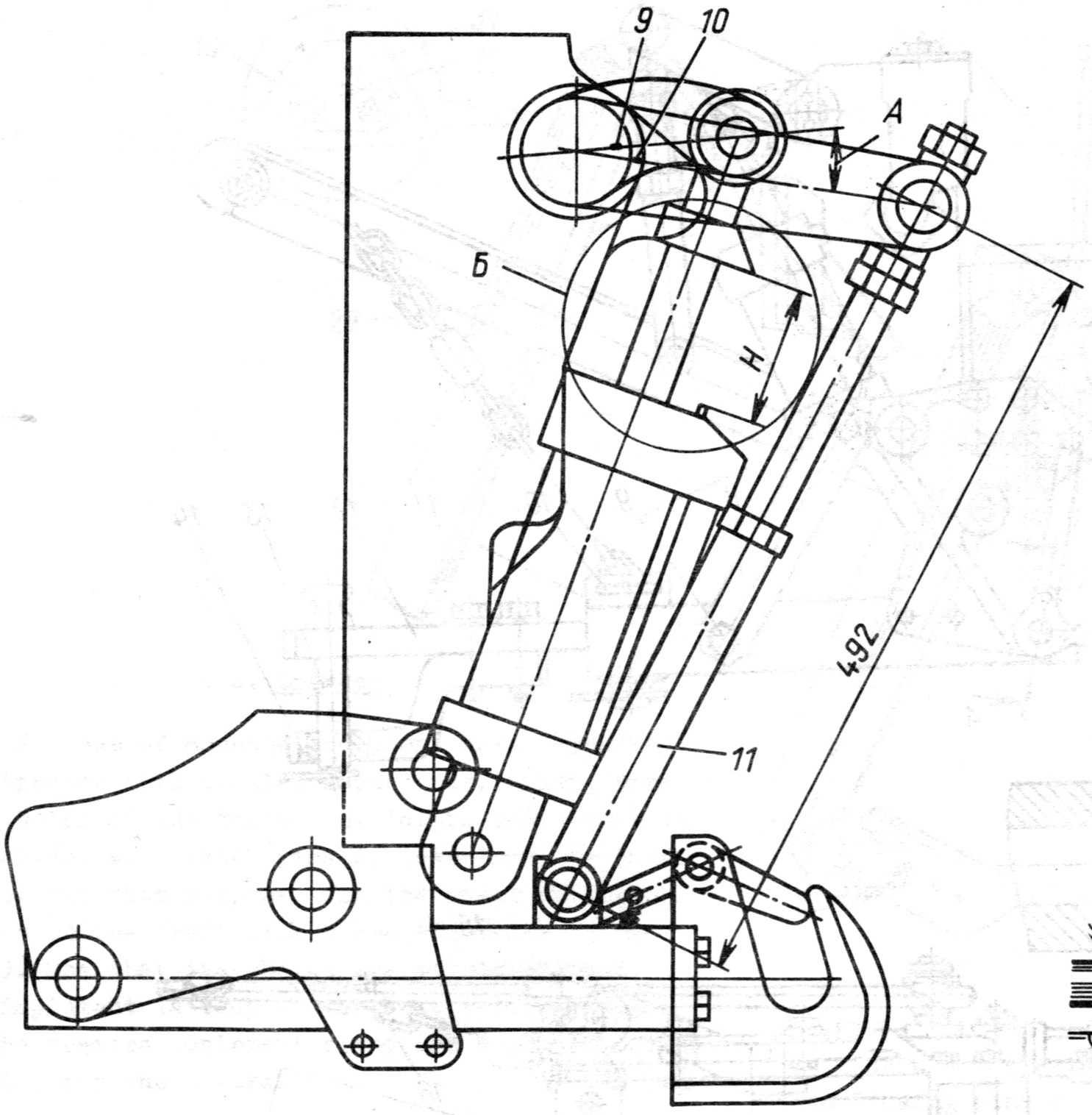

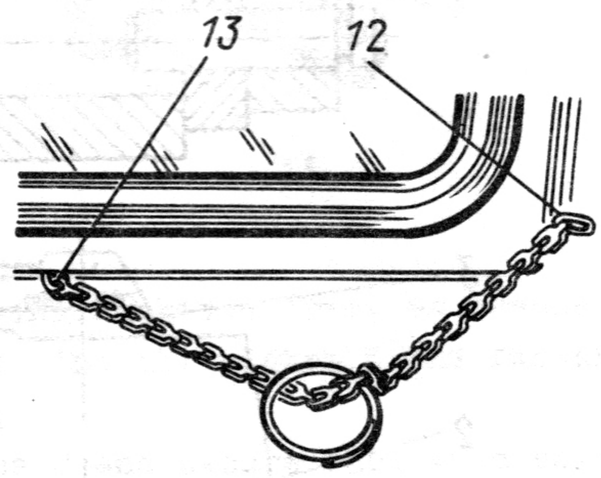

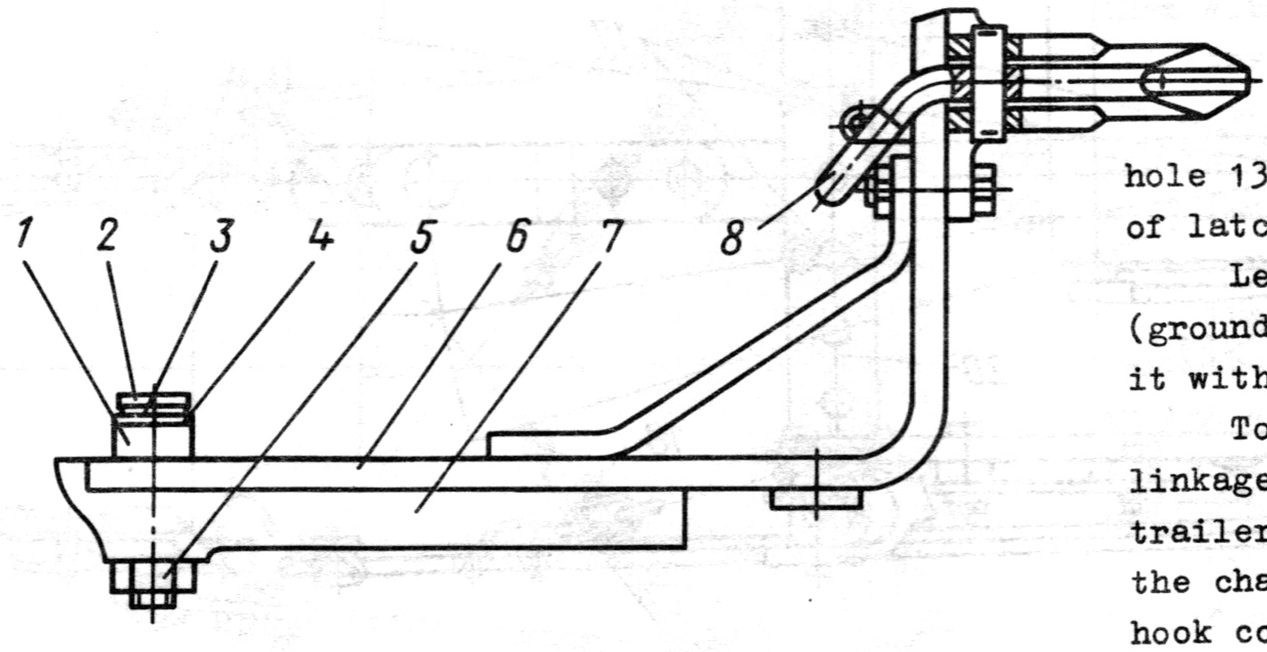

to holes in the brackets, secure the pins with nuts 5 and lock with cotter pins;

install bushings 1 and washers 4, lock them with spring cotter pins 3;

unscrew bolts which fasten lift arms 1 and 2 (see page 19) and reinstall the arms so that marks 10 on the faces of their hubs are two splines below marks 9 on the lift shaft, return the bolts in place;

adjust the length of the lift rods between their centers of attachment to be 492 mm;

connect yokes 11 of the lift rods to the frame side lugs;

secure one end of the chain terminating in a cotter pin in hole 12 in the side panel of the l.h. fender, pass the other end of the chain through hole 13 in the cab floor and secure it in the hole of latch 9.

Let the trailer tongue rest on a support (ground clearance at least 220 mm) before coupling it with the tractor.

To couple the trailer, use the hydraulic lift linkage to lower the hydraulic hook below the trailer tongue loop, open the hook by pulling on the chain ring, backtrack the tractor so that the hook comes under the trailer tongue loop, raise the hook frame to the upper position and when the hook enters the tongue loop, close it by releasing the chain.

Before detaching the trailer, brake it and fix the tongue loop at a distance at least 220 mm from the ground. Open the hook by pulling on the ring, lower the hook and drive the tractor a short distance forward. Release the chain.

8.5. Brake Master Cylinder

Before using the tractor with a 1ПТ-2Н single-axle trailer, install a brake master cylinder on the tractor.

To connect brake master cylinder 2 with seat 1, move the cylinder until it rests against the seat end, then depress the lock button located

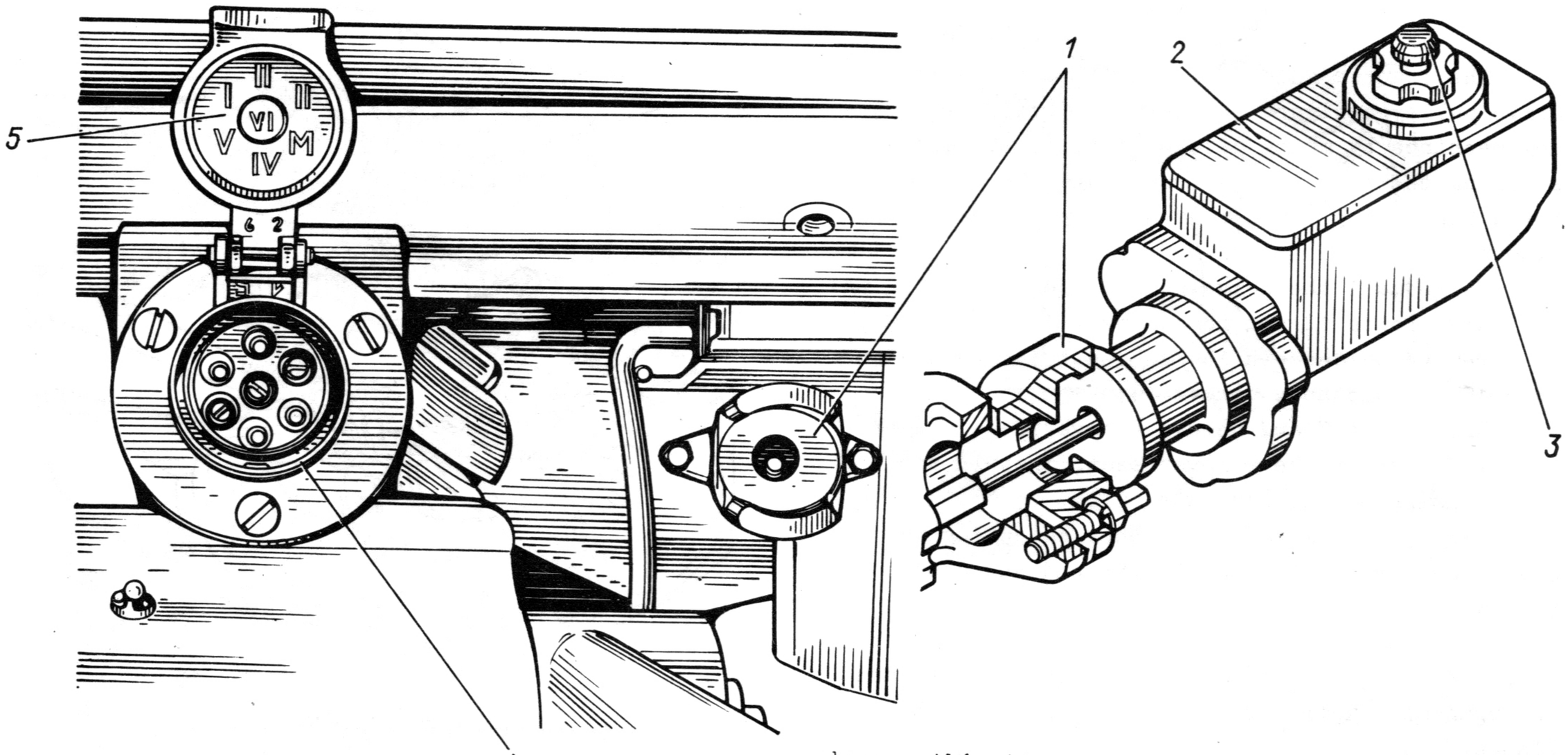

on the seat and turn the cylinder through 90° so that filler plugs 3 is at the top. Release the button.

The trailer operating instructions contain detailed information on the use and maintenance of the cylinder.

Socket 4 on the tractor is intended for connection of light and audible signalling devices to the trailed and mounted machines. When the socket is not used, it should be protected with cap 5 from ingress of dust and moisture.

8.6. PTO Shaft

Shut down the engine before attaching or detaching the PTO cardan, adjusting, servicing or cleaning a PTO-driven implement.

The PTO cardan protective housing must be always in place except for special cases noted in the implement operating instructions.

When the PTO is not used, its drive end must be capped.

Before installing the cardan joint on the PTO drive end make sure that the telescopic cardan shaft forks are in a plane (view "a"). Failure to observe this instruction (view "b") results in overload of the cardan drive and PTO.

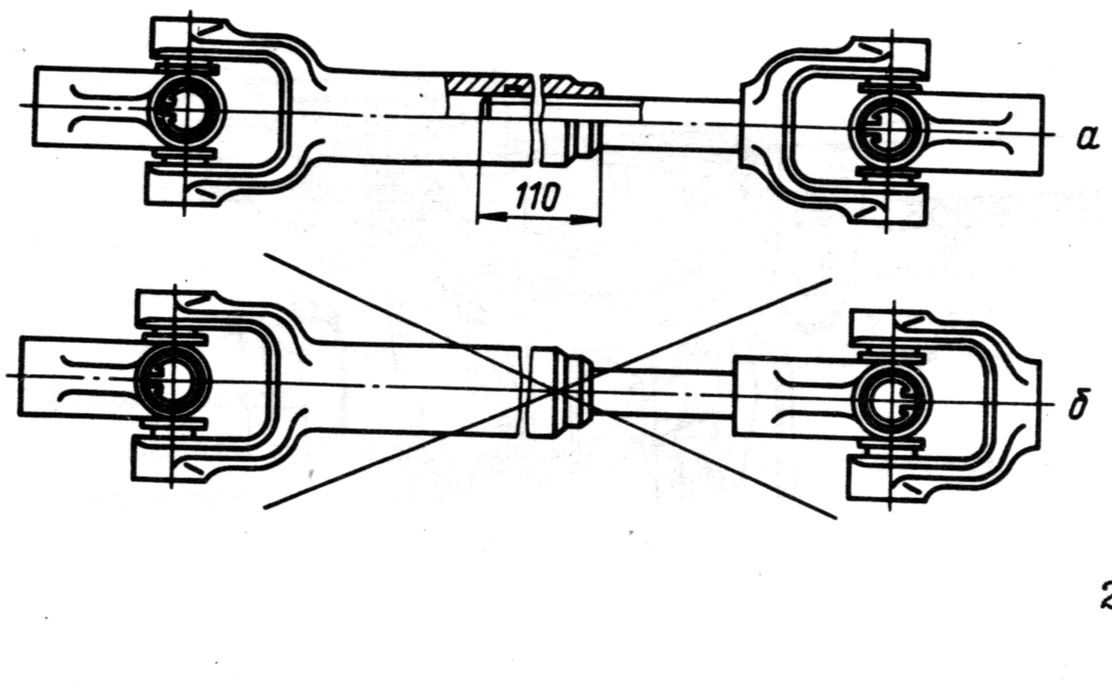

To attach the cardan to the tractor and PTO-driven implement, proceed as follows:

shut down the engine upon coupling the implement to the tractor;

remove the PTO protective cap;

attach the cardan rear joint to the implement and secure the attachment with a pinch bolt;

by rotating the drive end by hand bring slots on the shaft in alignment with the cardan front joint;

connect the cardan joint with the PTO drive end and secure the connection with a pinch bolt;

rotate the cardan by hand to make sure that the cardan and implement are free to rotate without jamming;

make sure that the cardan is installed properly by a trial lift of the implement without rotating the PTO shaft.

Upon installation of the cardan drive make sure that with the machine lifted to uppermost position the telescopic part lap is at least 110 mm (detachment of the cardan is possible if the lap is less than 110 mm. Reinstall the protective housing. Start up the engine and check the mounted (trailed) machine for serviceability at a low engine speed, then let the engine gain its rated speed.

Proceed in the reverse order to detach the cardan from the tractor and PTO-driven implement:

lower the implement and shut down the engine;

detach the protective housing;

undo the pinch bolt and remove the fork from the PTO shaft;

cap the PTO shaft;

uncouple the implement.

8.7. Drive Pulley

The tractor allows for installation of a drive pulley designed for driving diverse stationary machines by means of a belt drive. Before installing the drive pulley rearrange the tractor for a high setup and a rear and front wheel track 1400 mm.

To install the drive pulley, do the following:

undo bolts 12 and remove seat 11;

remove cotter pin 13, undo nut 14, remove washer 15 and distance sleeve 16;

undo bolts 7 and remove flange 10;

in place of the removed seat, install and bolt housing 2 together with pulley 1;

put splined sleeve 3, washer 4, spring washer 5 on the countershaft outer end and secure them with nut 6;

put gasket 8 on the outer face of the pulley hub, fit flange 10 so that the sleeve splines are in engagement with the toothed coupling of the flange;

take up the bolts and lock them with wire;

unscrew plug 9, pour 200 g of transmission oil into the pulley hub and turn in the plug.

Prior to coupling the tractor to a stationary machine, familiarize yourself with the machine

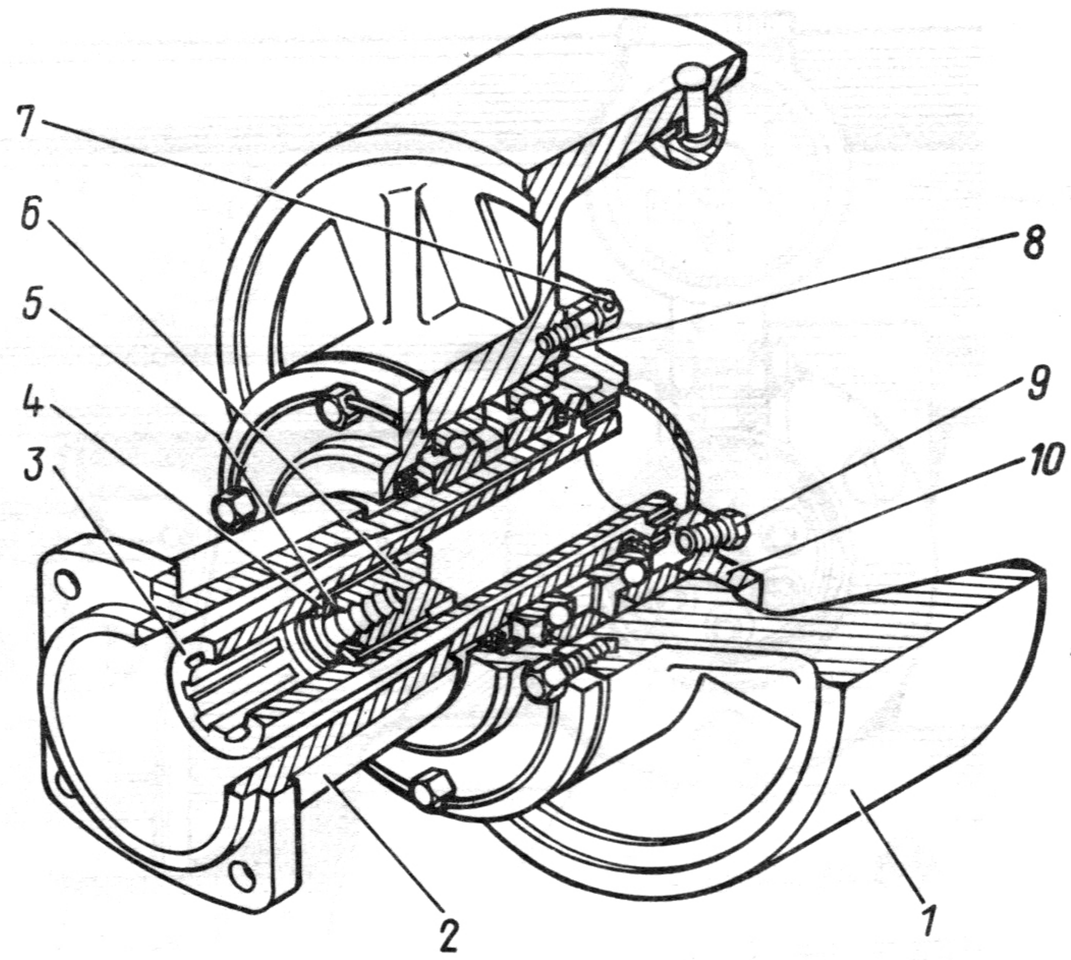

operating instructions. Never attempt putting on or taking off a drive belt while the pulley rotates. The driving belt with pulleys require a protective enclosure.

To couple the tractor to a stationary machine, do the following:

position the tractor so that its pulley is aligned with that of the machine, then put on the drive belt;

backtrack the tractor manually to tension the belt, then apply the hand brake and block the rear wheels with pads;

pull on the belt by hand to make sure that it fits over the pulleys snugly.

Before engaging the pulley, make sure that nobody stays in the immediate vicinity of the stationary machine and drive belt.

Load the machine only after trying it idle, beginning with low rpm and gradually speeding up to rated rpm. Engage the clutch smoothly.

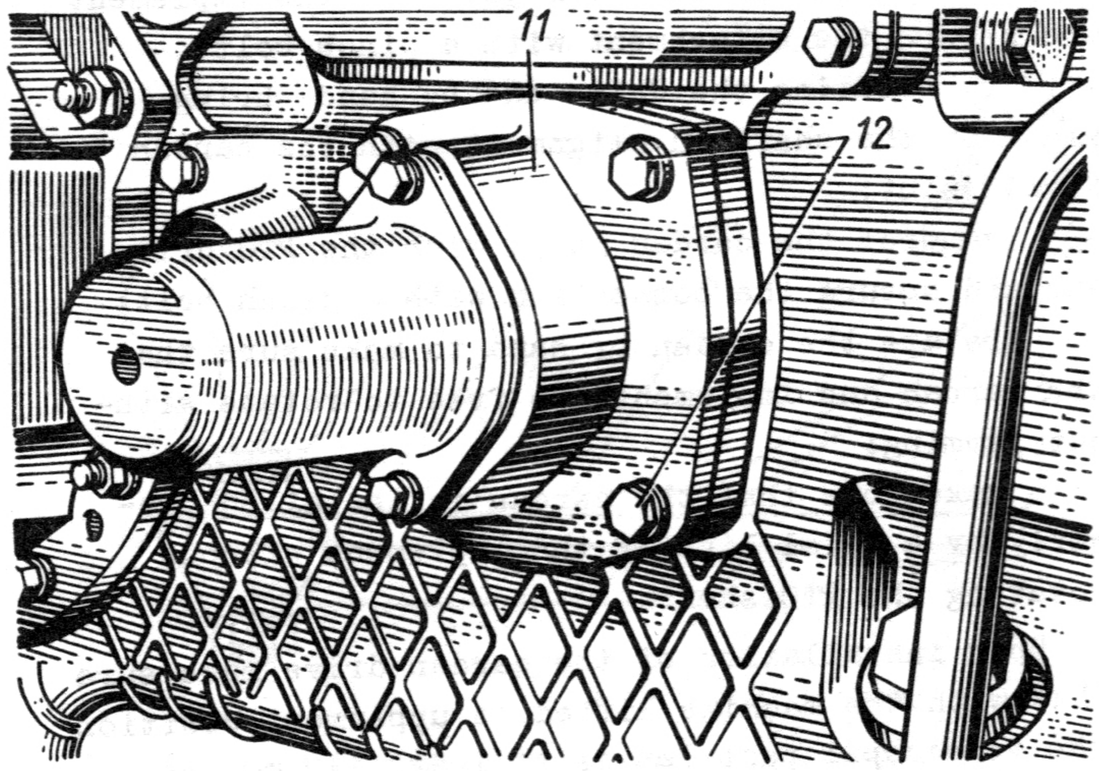

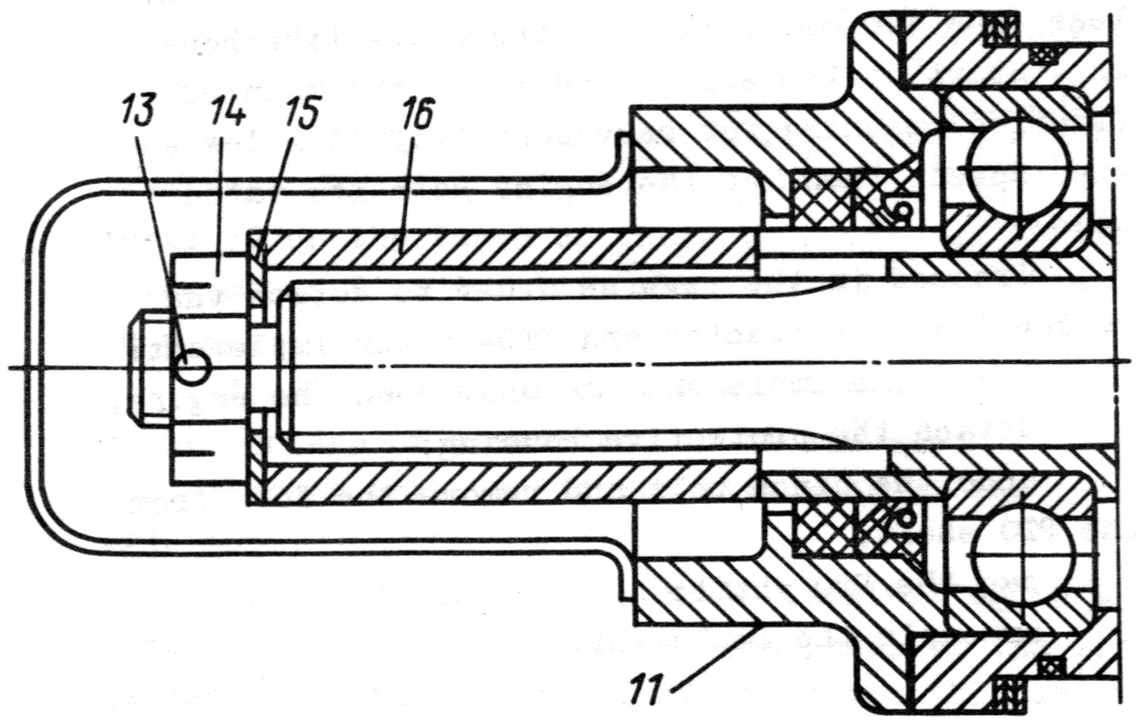

8.8. Tractor Rearrangement for Operation in Reverse Gear

To rearrange the tractor for continuous operation in reverse gear, do the following:

detach hoses 3 and 4 of the cab heater and interconnect their ends using hose 5 (supplied with the tractor);

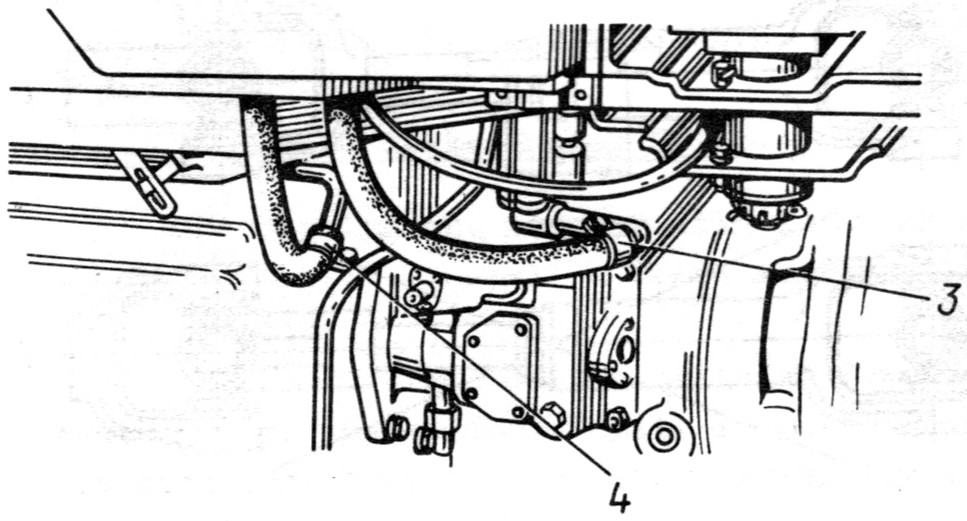

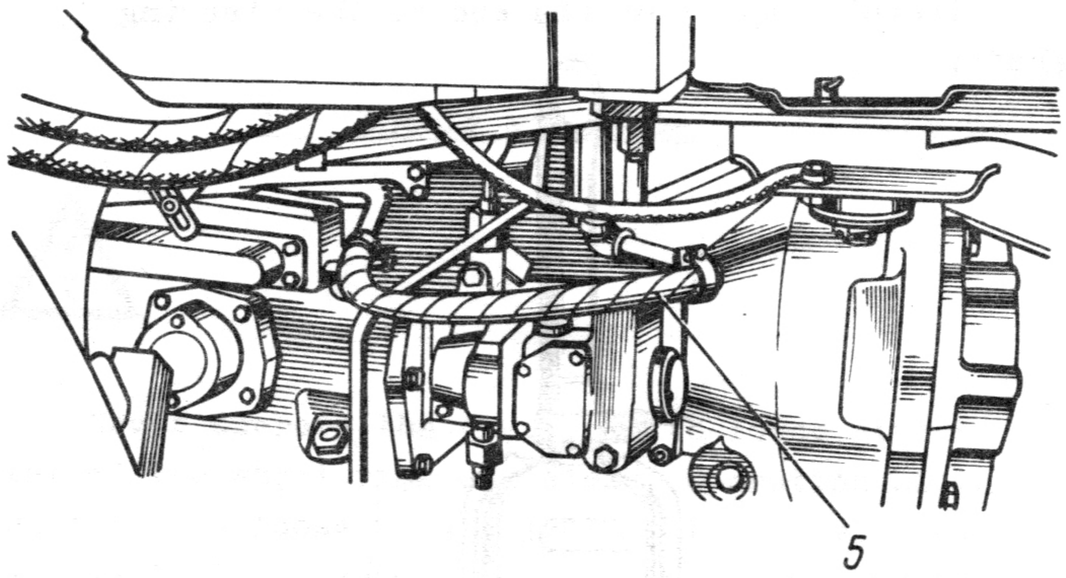

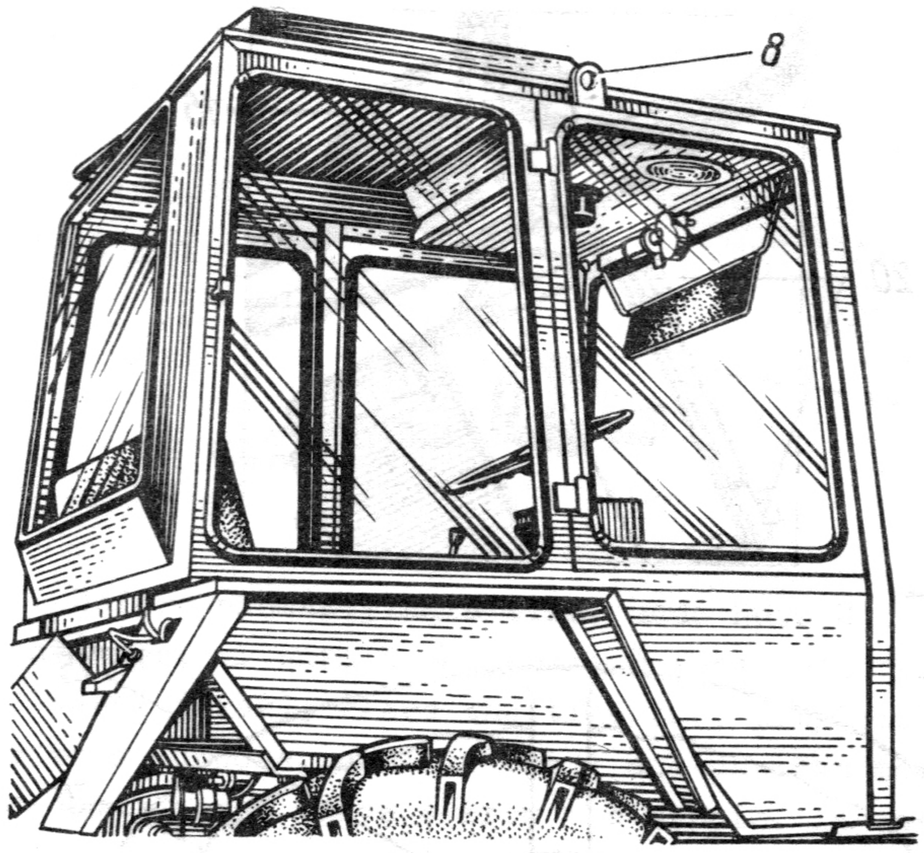

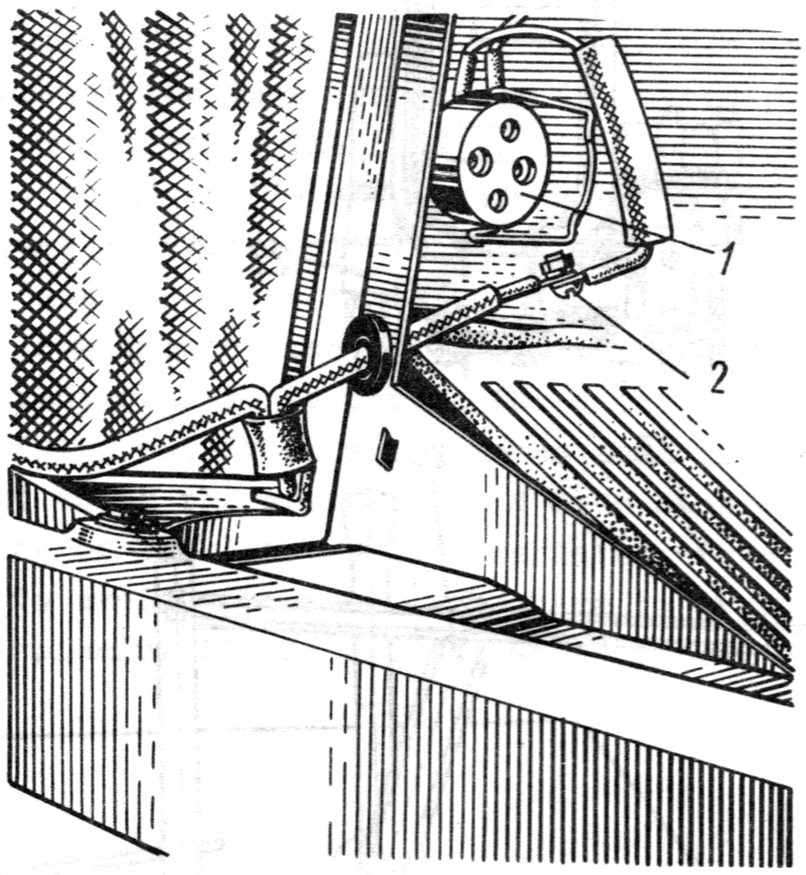

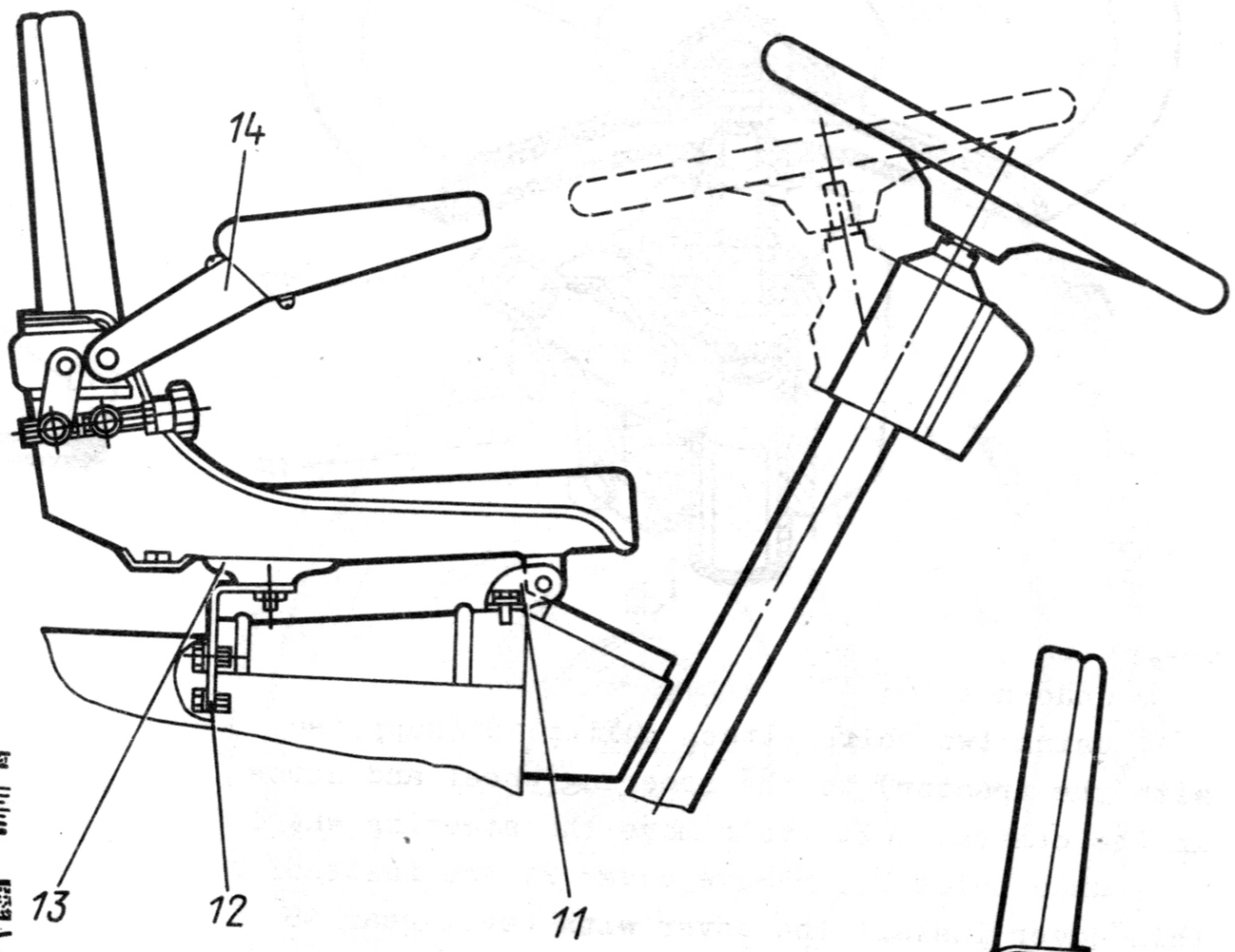

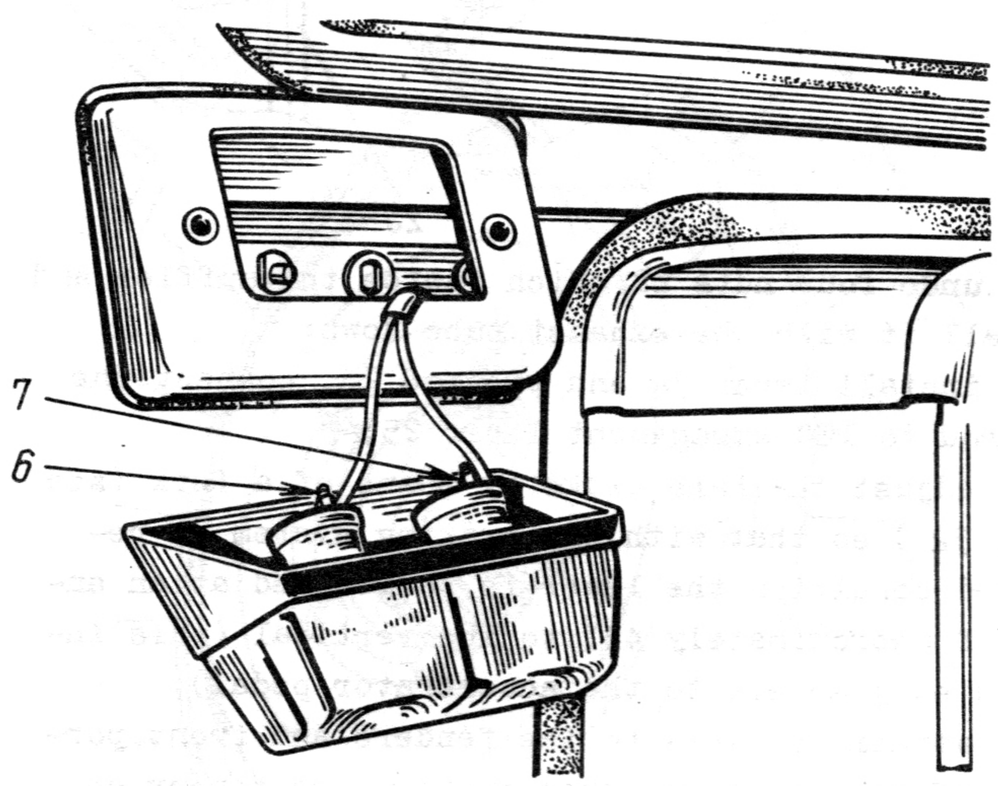

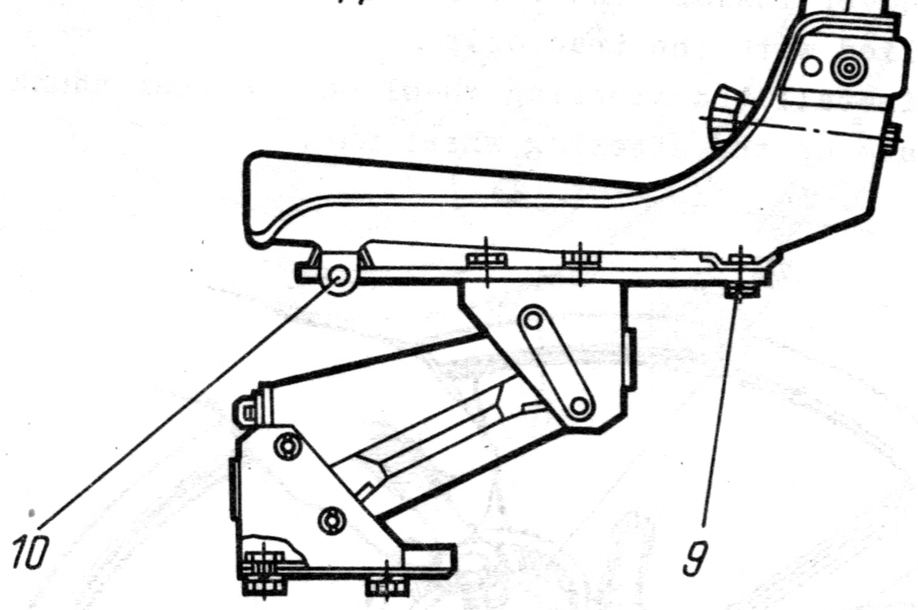

undo the bolts which secure the cab to the platform;

separate wiring connectors;

attach slings to cab eye-lugs 8 and remove the cab.

Reset the seat, as follows:

bolt brackets 12 and 11 in front of the instrument board;

secure rubber shock absorber 13 to bracket 12 using a nut;

undo bolts 9 and 10 and remove the seat;

install the seat on shock absorber 13 and pivotally secure it to bracket 11 using bolts, nuts and check nuts;

install elbow-rests.

To open the hood (when the seat is set for continuous operation in reverse), tilt the seat towards the steering column.

Reset the steering wheel as follows:

depress, turn counterclockwise and remove dummy cap 15;

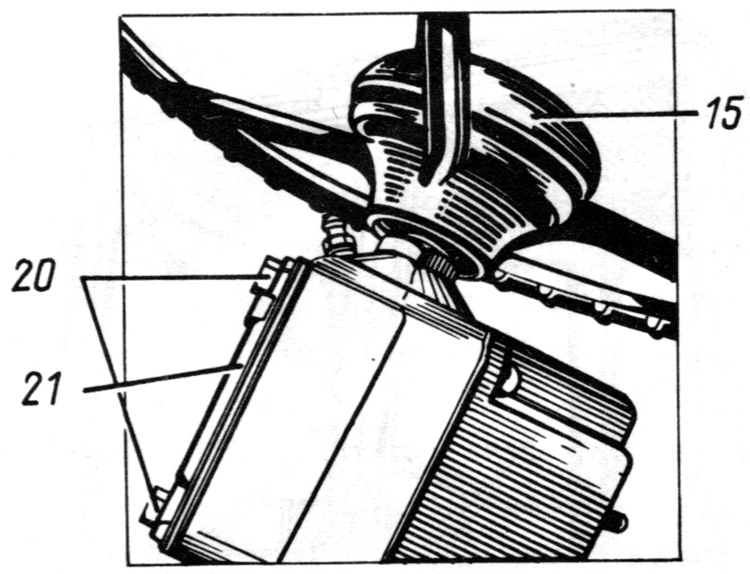

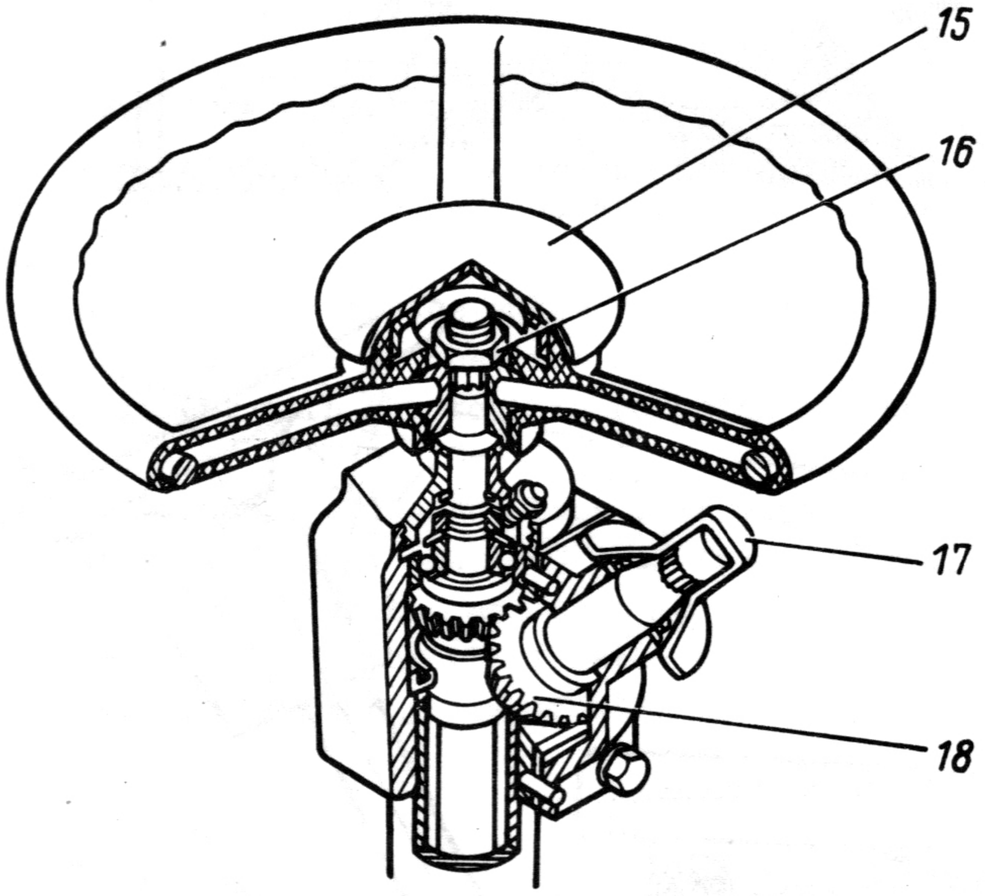

undo nut 16;

using two bolts attach puller 19 (supplied with the tractor) to the steering wheel and screw in the central bolt to remove the steering wheel;

undo bolts 20, remove cover 21 and instead of this cover install the cover with bevel gear 18 (supplied with the tractor);

install the steering wheel on the gear shank and take up the steering wheel nut;

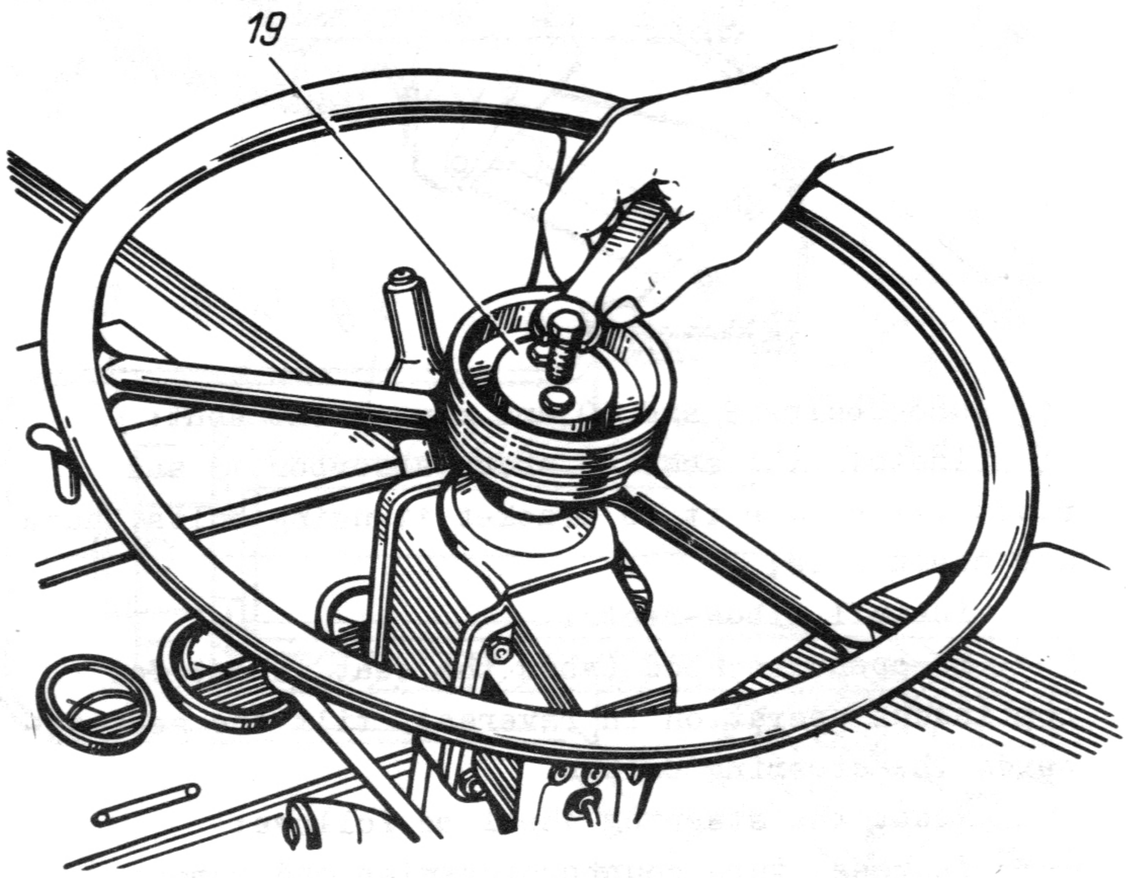

install dummy cap 15 in the steering wheel hub;

install cap 17 on the end of the steering shaft;

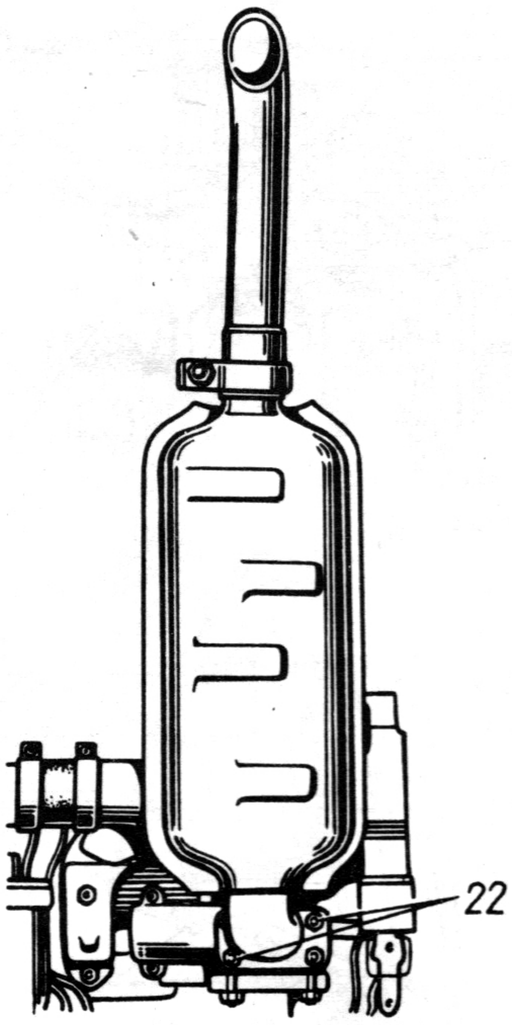

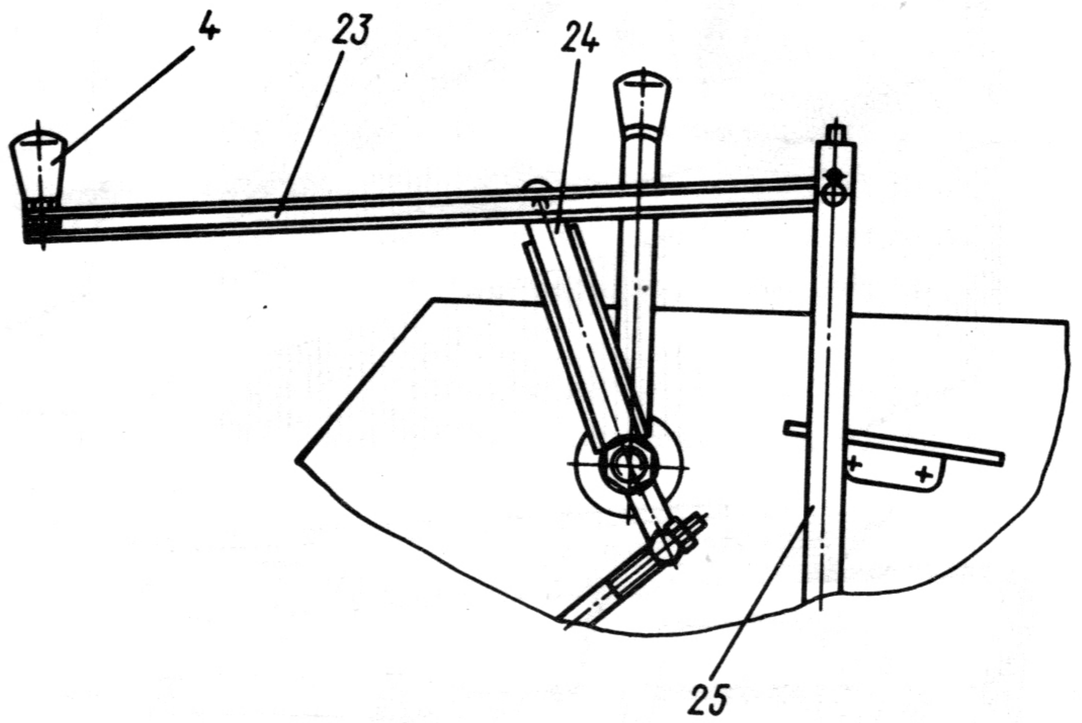

undo four nuts 22 which fasten the muffler and **install it with** the exhaust tube down;

install lever 24 and tie-rod 23, connect the tie-rod to PTO engagement lever 25;

adjust the hand brake by means of a fork (see page 52) so that with the braking system in released condition the lever is positioned at an angle of approximately 45° to the vertical (this insures easy access to the accelerator pedal);

attach brackets to the fenders and front portion of the platform, then install the canopy on the brackets.

The procedure of resetting of the T25A2 and T25A3 is essentially the same (except for the cab; the canopy and frame remain in place). Displace the roll-over protective structure roof of the T25A3 tractor towards its hood.

Interchange the rear wheels (see page 31) to insure proper action of the grousers and rule out damage of the tire sides.

When operating the tractor with mounted equipment, secure the chain in holes in the draft links. Tension the chains (see page 20).

9.1. Wheels and Tires

Never operate the tractor with loose attachment of the wheel rims and disks. Operation of the tractor with loose nuts attaching the wheel disks may result in premature wear of locations and mounting faces and failure of the disks and rims.

To insure against premature wear, normal air pressure in the tires must be maintained in all seasons of the year (see Table 5). Avoid even short-time operation of the tractor with underinflated tires. Do not inflate the rear wheel tires to air pressure in excess of 0.25 MPa (2.5 kgf/cm^2), otherwise rapture of the tire side is possible. Protect the tires from contact with fuel and lubricants. If the tractor is to be parked for a term longer than one month, put it on supports so that the tires do not touch the ground. Avoid even short-time parking of the tractor with deflated tires.

To avoid tire wear, take care to prevent excessive spinning of the driving wheel tires.

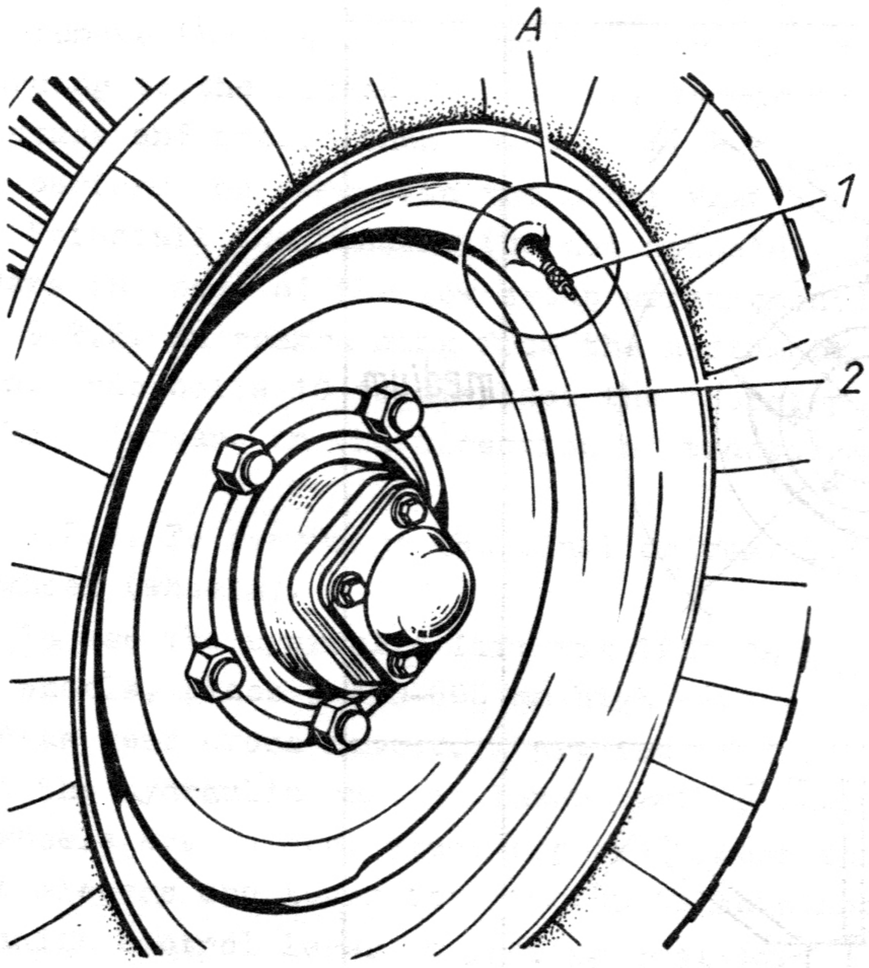

Do not use tires and tubes other than those of the sizes recommended by the manufacturer.

Mounting and dismounting of tires for replacement or repair of their tubes require certain skills. Take care to avoid damaging of the tubes when doing manipulations with hand tools in mounting and dismounting.

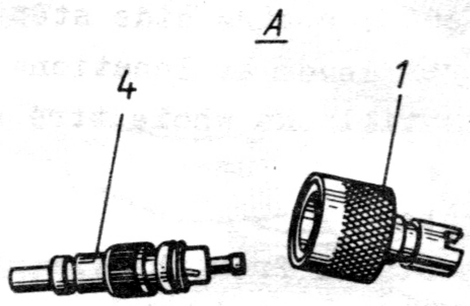

Before dismantling a tire, undo nuts 2 on the front wheel or nuts 5 on the rear wheel and remove the wheel (disk). Bleed the tire tube completely. For this purpose, unscrew cap 1 and use its back side to unscrew valve 4 from the nipple. In case of dismantling a rear wheel tire tube, first undo nut 6 and remove nipple 6, then undo nut 7.

Dismantle the tires in the following order:

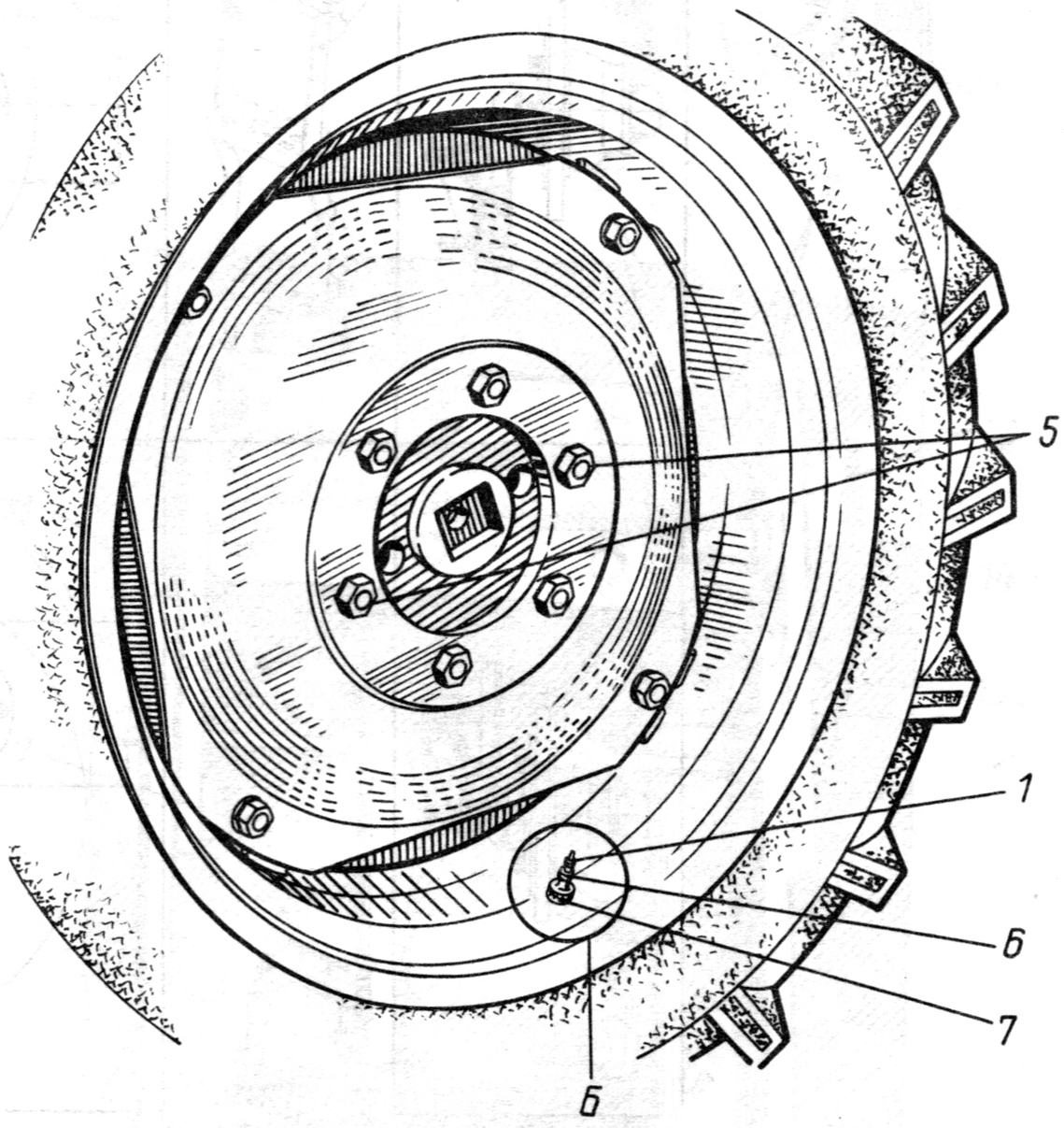

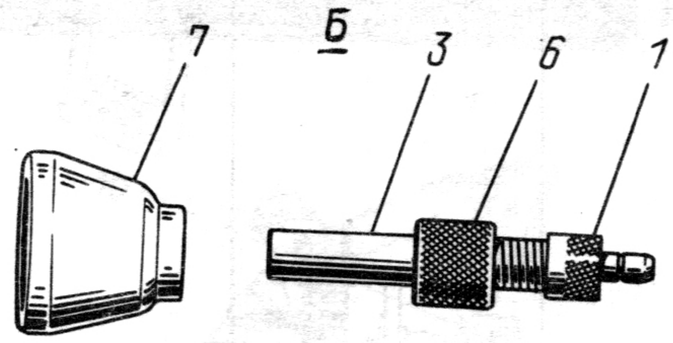

depress the nipple to bury it upon letting air out of the tube;

forcibly push the tire side from the rim inside;

using two tire levers (one inserted 15-20° away from the nipple, the other inserted at a distance of 100-150 mm) force out the tire side;

go on forcing out the tire side step-by-step ba inserting the other lever at locations further away from the nipple till the whole tire side is outside;

pull out the tube;

remove the other side from the rim, if need be (the side is removed easily).

To mount the tires, do the following:

spread petrolatum on all mounting faces on the rim;

put one tire side on the rim (see that arrows on driving wheel tires in the upper position are directed forward motionwise);

apply talc on the inner tire surface;

insert the tube and pass the nipple through a hole in the rim (pass the nipple and screw up nut 7 in the rear wheel tire);

put on the second tire side so that the installation of the tire can be completed near the nipple;

screw (not as far as it will go) the valve core into the nipple, screw the hose nut on the core and pump up some air to make the tire tube get smoothed;

insert a tire lever at the installed tire edge and complete the mounting using another lever;

inflate the tube to a normal pressure to see that the tire sides are in place;

draw up the valve core tight. Use a soap solution to check the nipple for tight seal and screw on a cap.

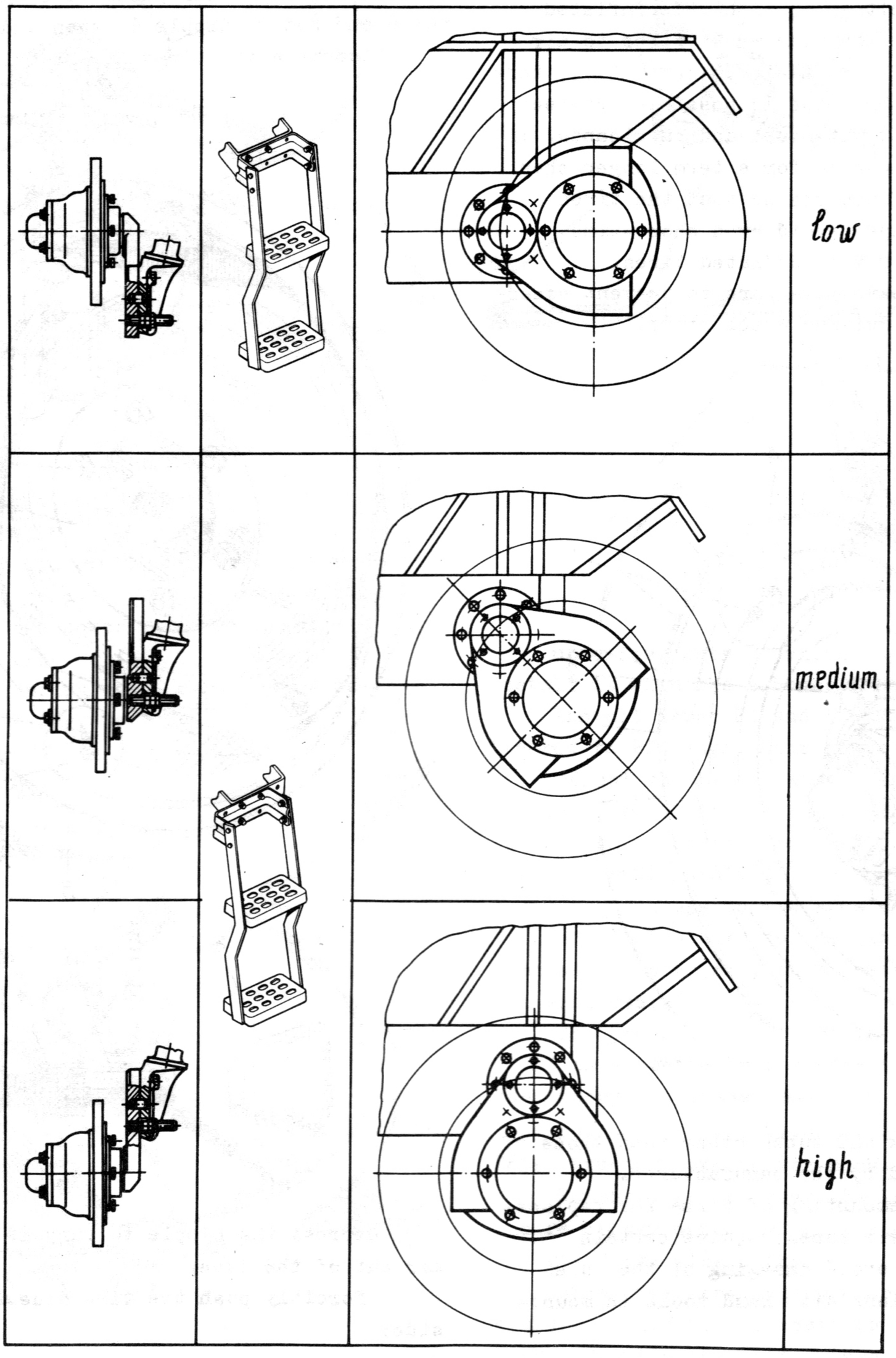

If the tire sides fail to become firm as the tube is inflated to the full pressure, blow off the tube, change the position of the tire on the rim, smear the sides again and repeat inflating the tube to the full pressure.

When mounting the rear driving wheels, it should be seen that arrows 8 are oriented in the direction of rotation of the wheels as the tractor runs forward.

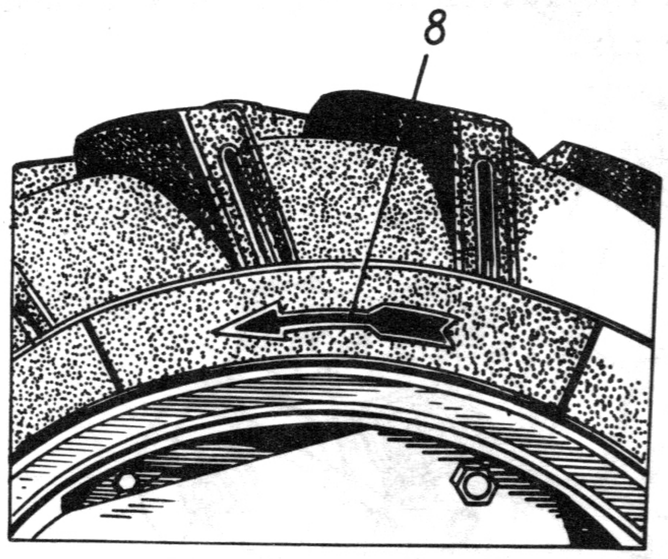

9.2. Tractor Setup Rearrangement

The manufacturer ships the tractors in the medium setup, however certain conditions of work may require rearrangement of the tractor to the high or low setup.

9.2.1. Rearrange the front axle as follows:

undo nuts 1 and bolts 2, remove fenders 3;

jack up one of the front wheels to make the rearrangement possible;

uncotter and undo bolts 4 and studs 5;

remove the wheel with shaft 6, arrange them according to the needed setup, take up the bolts and studs and secure them in place with cotters;

perform the same with the other wheel;

Reinstall the fenders (do not reinstall the fenders in case of the low setup arrangement).

9.2.2. In rearranging from the medium to high setup, undo bolts 10 to displace the footstep by one hole forward in the direction of tractor movement.

9.2.3. To rearrange the final drives, lift up the wheel (wheels).

To use the hydraulic lift for lifting up the rear wheels, place a 450-600 mm high support under the draw gear cross member, start the enging and shift the hydraulic control lever to lowering. When the wheels are raised, place supports under the shaft sleeves and lower the tractor by shifting the hydraulic control lever to lifting position.

Then, do the following:

undo the nuts which secure the wheel disks and remove the wheels with disks;

release the brakes;

undo nuts 16 which secure the final drive housing and remove the washers;

turning two bolts (M12x1.75) in the threaded holes 17 of the flange, displace the final drive housing;

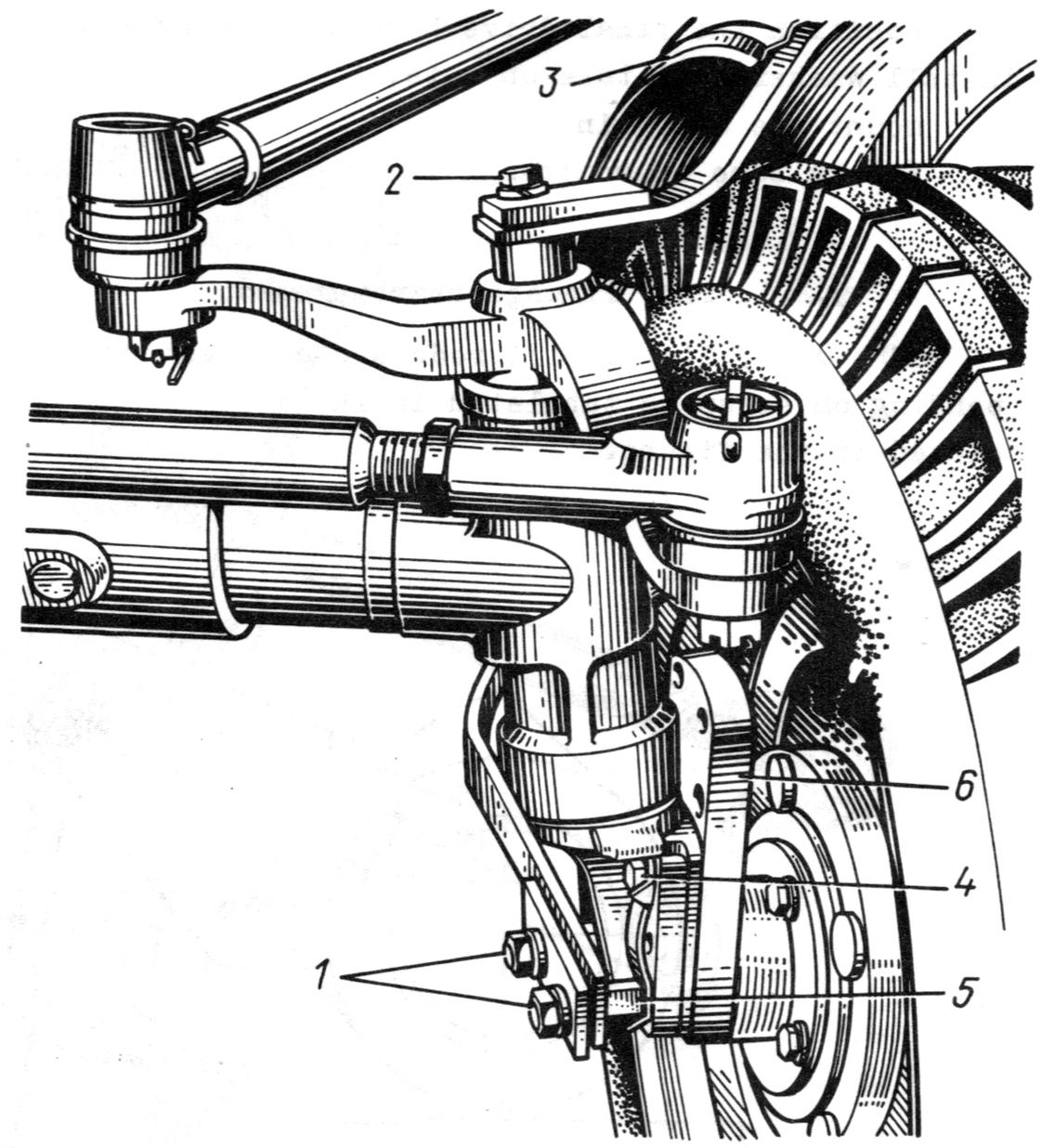

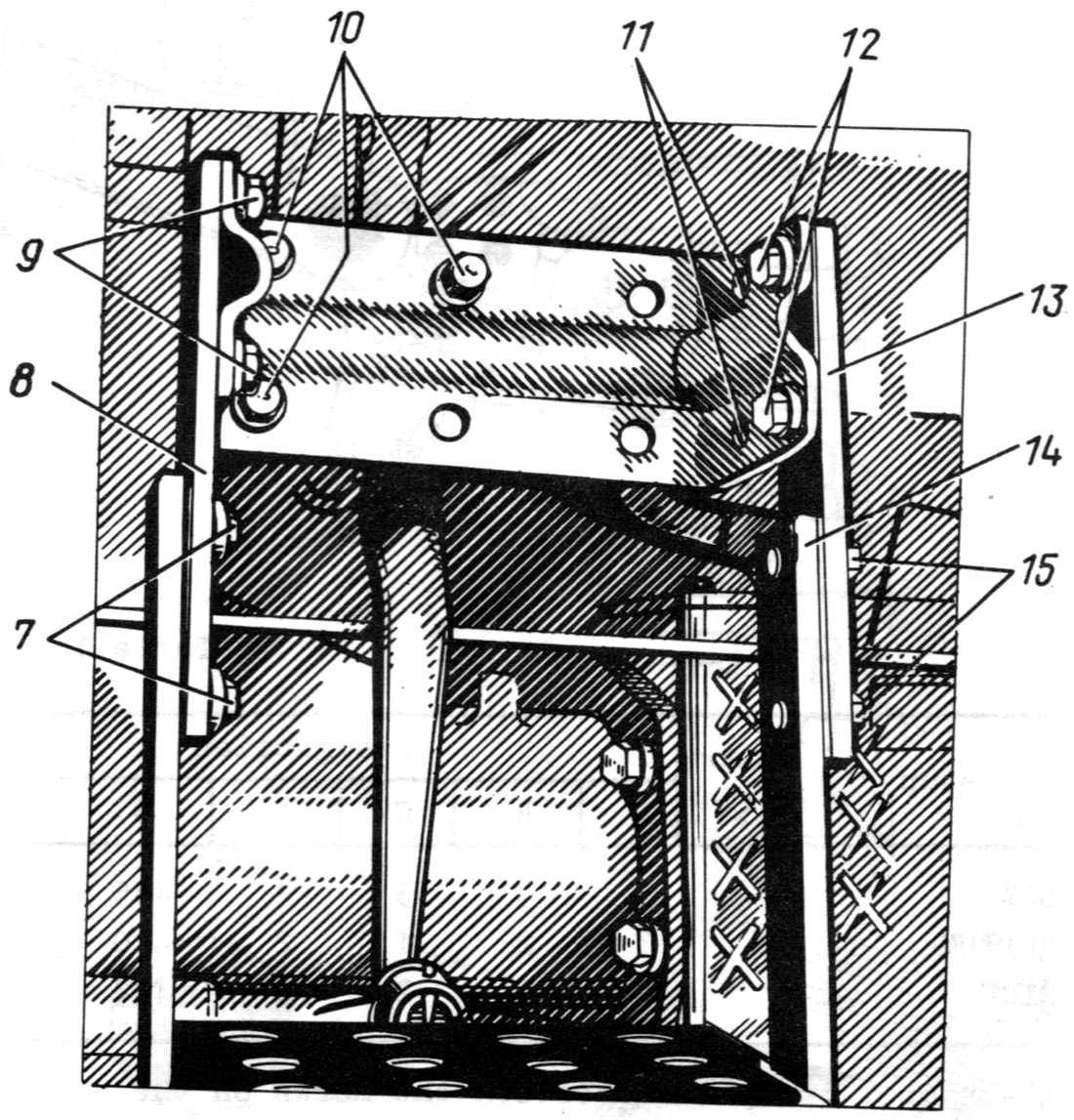

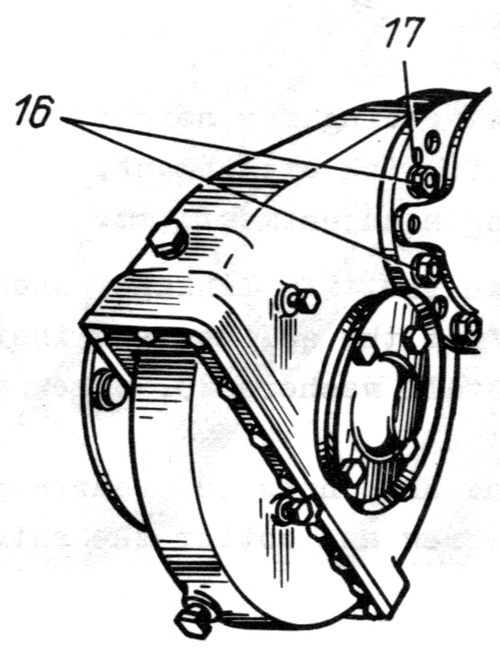

position the final drive housing as required, install washers and take up nuts;

mount the wheel in place.

Do the same to rearrange the other final drive.

9.2.4. Lift linkage rearrangement

The arms, links, lift rods are arranged depending on setup as tabulated in Table 1 and depicted in the figure.

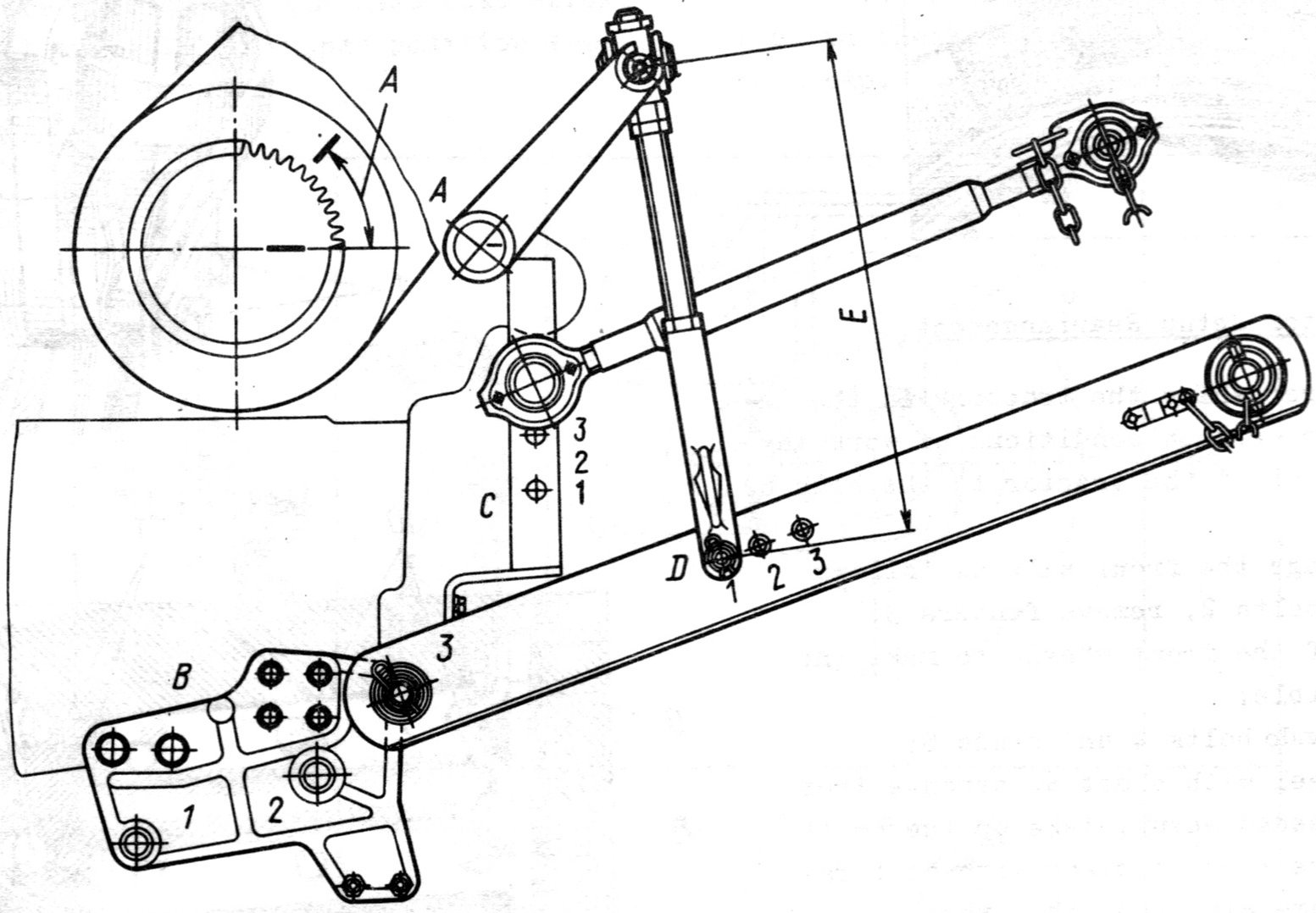

Table 1

Setup	Designation				
	A	B	C	D	E
LOW	6	3	3	1	435
MEDIUM	3	2	1	2	480
HIGH	1	1	2	3	492

A - number of splines between the marks on the shaft and arms;
B - draft link setting;
C - central link setting for height;
D - lift rod/draft link attachment;
E - lift rod length adjustment, mm.

To rearrange the lift linkage, undo bolts 22, remove arms 24 from the splines and install them as depicted, install washers 23, screw and cotter the bolts;

uncotter and undo nuts 18, rearrange front joint pins 19, screw and cotter the nuts;

remove spring cotter pins 28 and pins 27, undo check nuts 21 adjust the lift rod length by turning forks 20, take up the check nuts, install the pins and secure them with cotter pins.

To rearrange the tractor to high setup, replace the long coupling tube of the central link with a short one. To change the central link height, remove spring cotter pin 26 and pin 25, position the latter as required and secure it with a cotter pin.

9.3. Adjusting Tractor Wheel Track

9.3.1. Adjust the front wheel track as follows:

jack up one of the wheels;

uncotter and undo, through one or two revolutions nuts 2 of bolts 1 of the axle beam;

undo the nut and take out coupling bolt 3;

unscrew bolt 4 and remove strip 5 with a locating pin;

install the king pin to the required length so that the hole under the locating pin in the axle beam is in register with that in king pin 6;

install the strip with locating pin and screw bolt 4;

screw and cotter nuts 2;

perform tze same operations with the other king pin;

align the required groove on bar 7 with the hole for the coupling bolt in the tie rod tube;

insert bolt 3 and screw the nut.

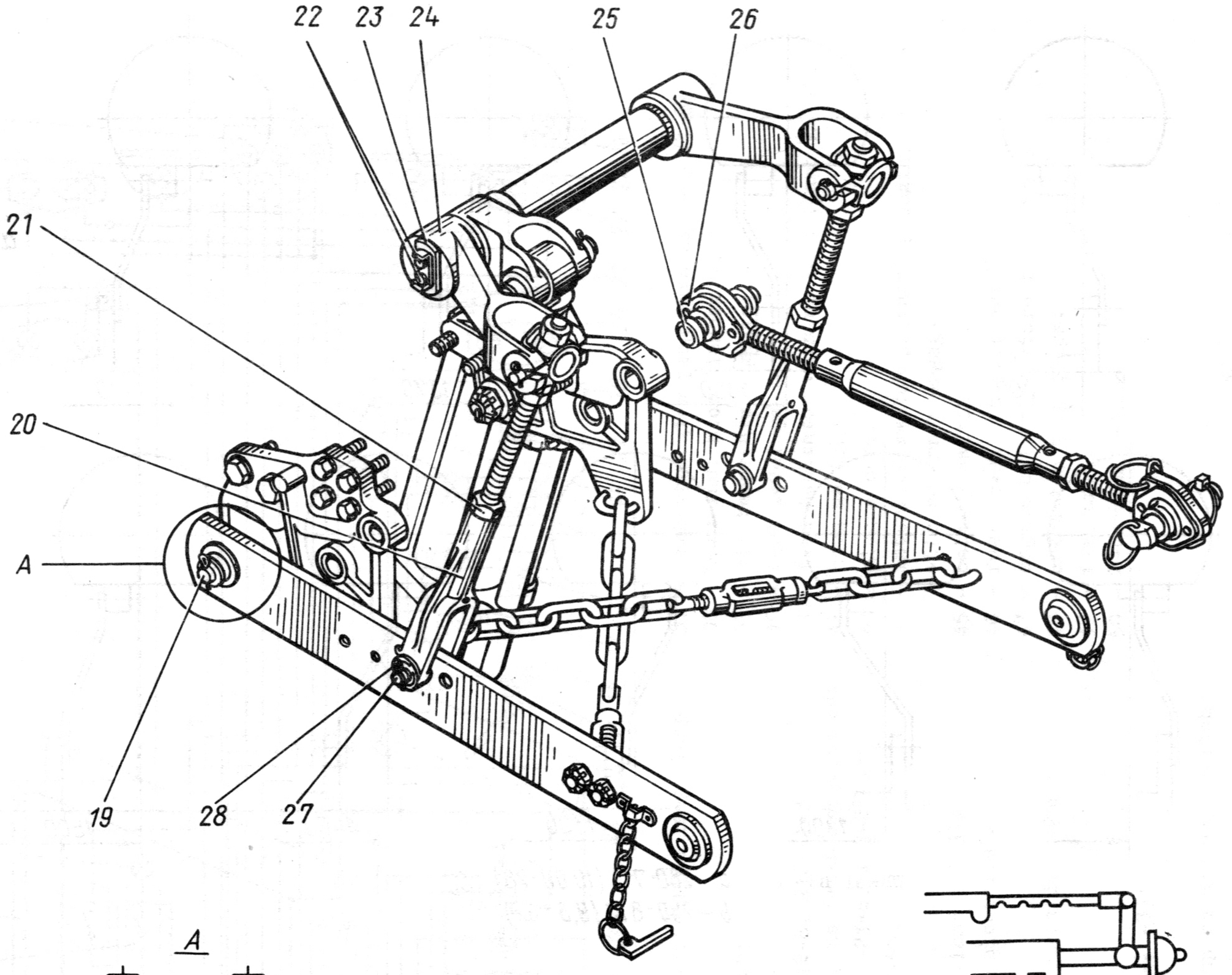

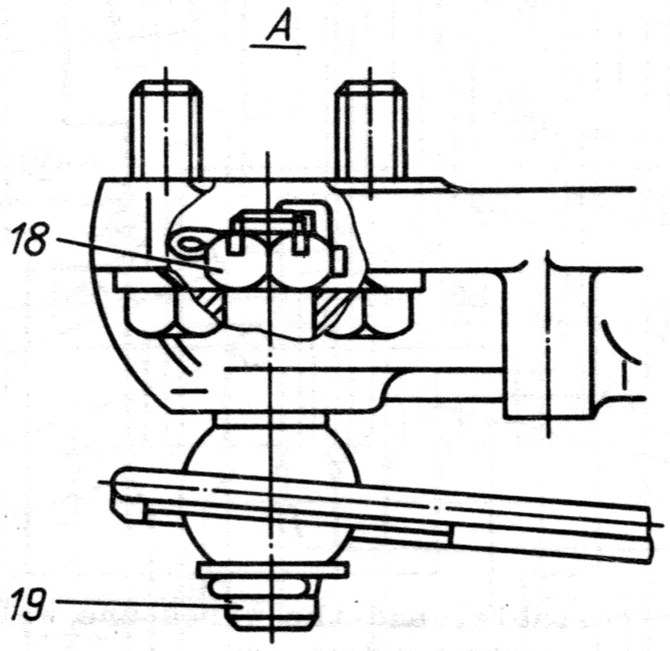

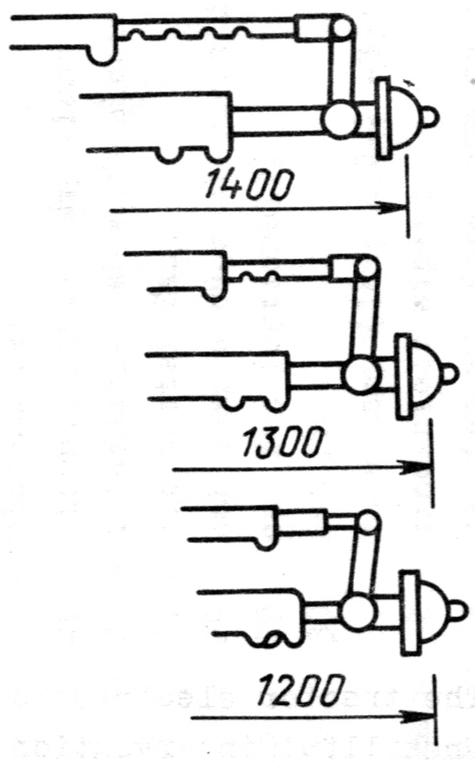

9.3.2. Adjust the rear wheel track as depicted.

In adjusting, see that arrows moulded on the tire sides (in the upper position) point in the direction of wheel working rotation. If this is not the case, interchange the wheels.

In setting the rear wheel track for 1100 mm, see that the tire valve is on the outer side of the tractor to avoid brushing against the final drive housing. Reinstall the tires, if this is not the case.

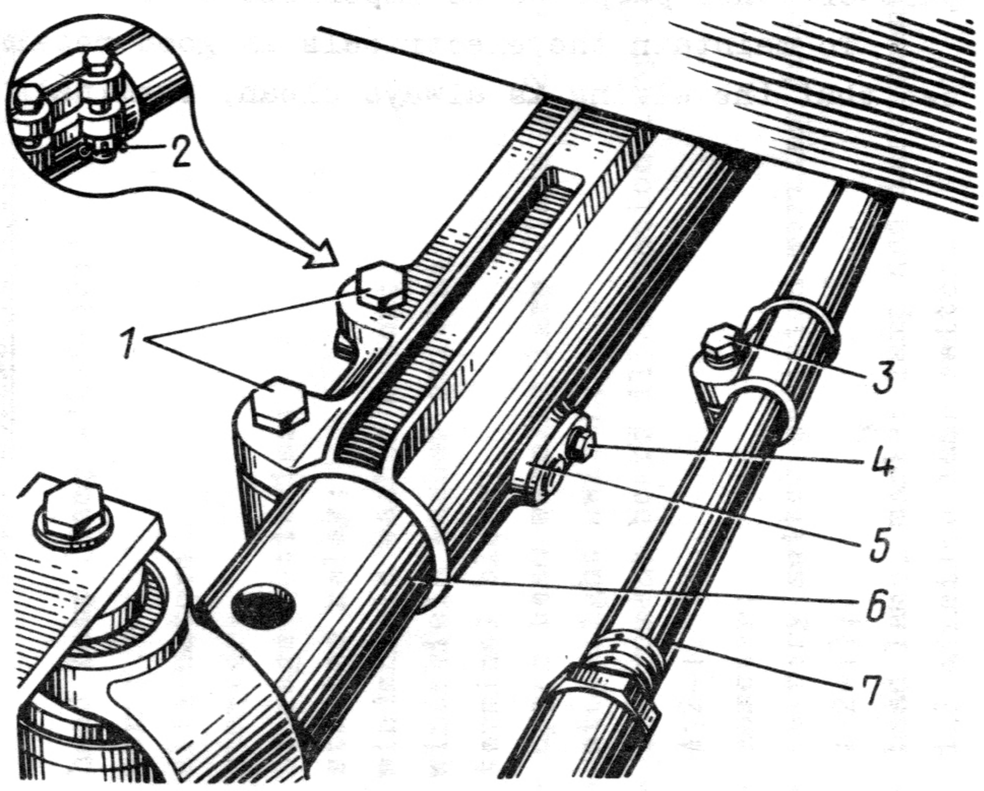

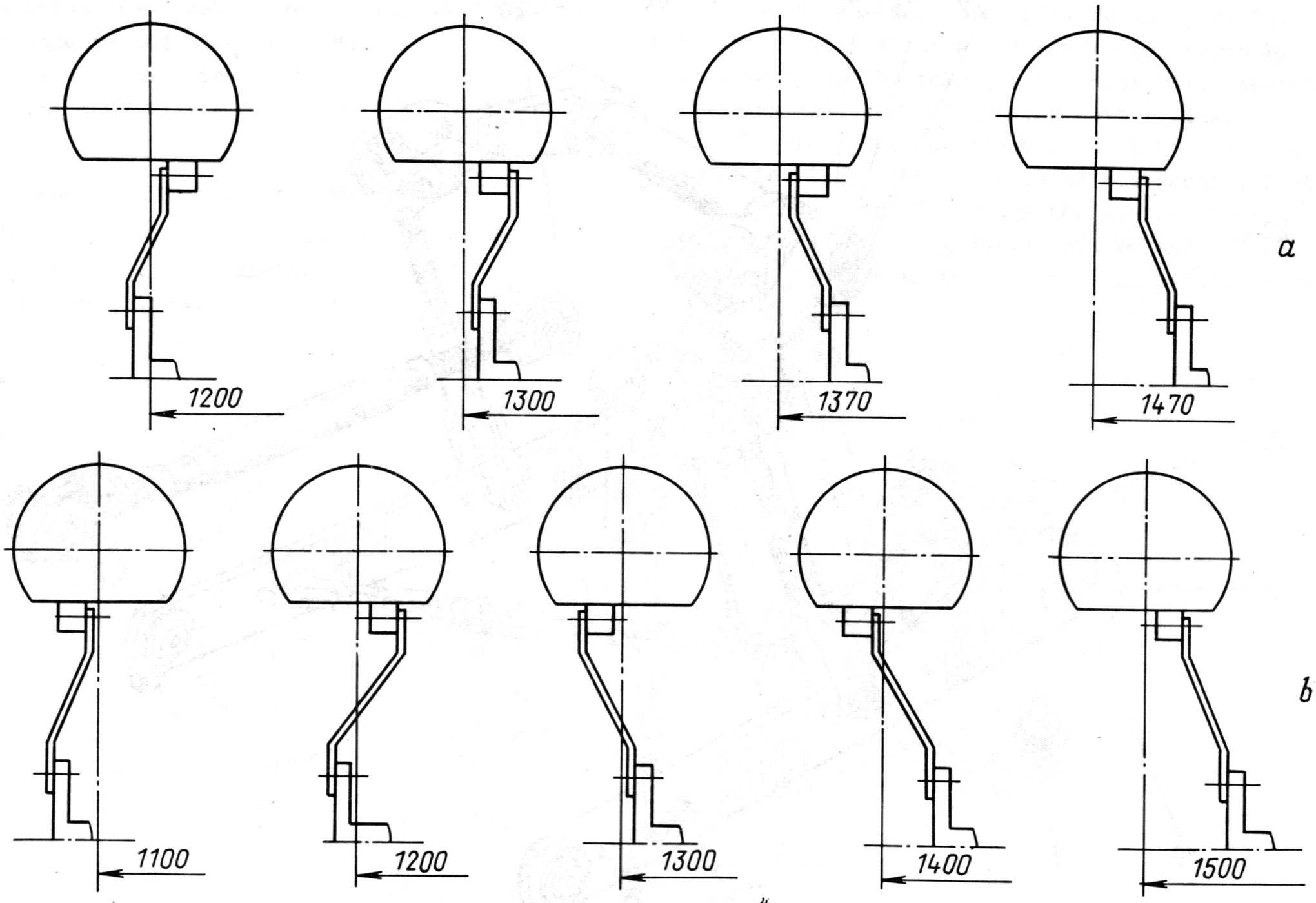

Wheel size: a – 280-711 (10,00-28")
b – 240-813 (9,5-32")

10. ELECTRICALS

The tractor electricals comprise a complex system. Unskillful intervention in the system for repair or other purposes is impermissible.

To maintain the electricals in good repair, see that the wiring is always clean, terminals and contacts are reliable, and the wires are well-insulated.

The electricals essentially comprise an alternator, storage batteries, starter, sensors, instruments, terminals, contacts, wiring.

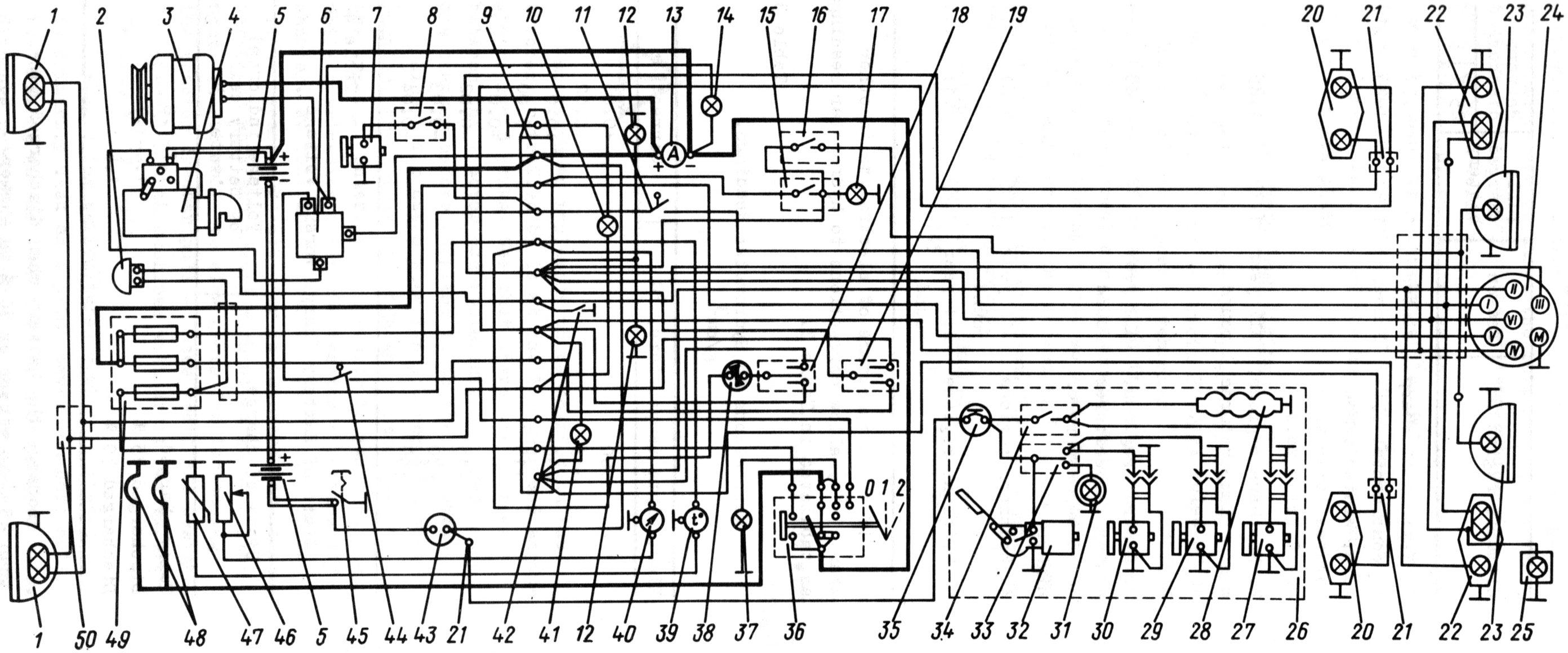

10.1. Schematic Circuit Diagram

1 - head lamp (lamp A12-50+21);
2 - horn;
3 - alternator;
4 - starter;
5 - storage batteries;
6 - starter relay;
7 - windshield washer motor;
8 - windshield washer switch;
9 - terminal block;
10 - upper beam warning lamp (lamp A12-1);
11 - stop-light switch;
12 - instrument board illumination lamp (lamp A12-1.5);
13 - ammeter;
14 - battery switch position warning lamp (Lamp A12-1);
15 - head lamp, marker lamp and instrument boarc illumination lamp switch;
16 - rear lamp switch;
17 - tachospeedometer illumination lamp (lamp A12-1.5);
18 - turn indicator switch;
19 - head lamp dipswitch;
20 - front lamp (lamps A12-8; A12-21-3);
21 - disconnection locations (when removing cab);
22 - tail lamp (lamps A12-21+6, A12-21-3);
23 - rear lamp (lamp A12-50);
24 - plug socket;
25 - licence plate lamp (lamp A12-3);
26 - detachable cab with electricals;
27 - cab heater fan;
28 - cab rear window electric defroster;
29 - cab fan (optional);
30 - cab fan;
31 - dome lamp (lamp A12-21-3);
32 - windshield wiper;
33 - cab fan and dome lamp change-over switch;
34 - cab heater fan switch;
35 - thermal bimetallic cut-out;
36 - ignition lock (switch);
37 - preheater glow plug warning lamp (lamp A6-1);
38 - turn indicator flasher unit;
39 - oil temperature gauge;
40 - fuel level gauge;
41 - turn indicator warning lamp (lamp A12-1);
42 - horn switch;
43 - plug socket;
44 - interlock switch preventing engine starting with reverser engaged;
45 - battery switch;
46 - fuel level transmitter;
47 - engine oil temperature transmitter;
48 - preheater glow plugs;
49 - fuse unit;
50 - 2-terminal block

10.2. Alternator

The alternator is designed to generate electric power and maintain voltage automatically within the preset limits.

⚠

To avoid failure of the alternator when welding operations are carried out on the tractor or machine coupled to it, do not fail to disconnect wires 2 and 1 from the alternator terminals "+" and "Д".

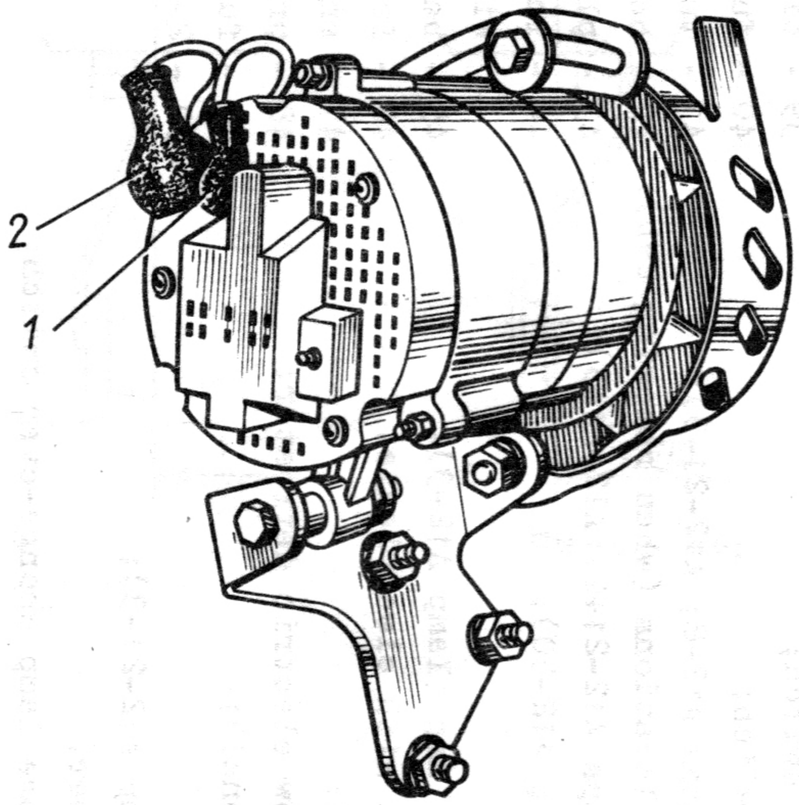

10.3. Storage Batteries

The storage batteries are designed to accumulate electric power and supply power to the consumers (lights and instruments) when the engine is not running and to start the engine.

The batteries must be given maintenance timely and properly if their service life is to be prolonged.

The storage batteries are two series-connected 6-V batteries ЭСТ-I55ЭМ of 155 A·h or one 12-V battery.

The batteries are filled with electrolyte the density of which in the fully charged batteries, versus climatic conditions, must correspond to values tabulated in Table 2.

Use a hydrometer to check the batteries for charge condition versus electrolyte specific gravity (Tables 2, 3) and check their condition versus on voltage using a cell tester (Table 4) (see page 54).

Table 2

Electrolyte Specific Gravity at 15 °C, g/cm³

Climatic region	Season	Fully charged battery	Battery discharged	
			25 %	50 %
1. Regions of sharply continental climate, winter temperatures lower than 40 °C below zero	Winter	1.31	1.27	1.23
	Summer	1.27	1.23	1.19
2. Northern regions, winter temperatures 40 °C below zero or higher	All year round	1.29	1.25	1.21
3. Central regions, winter temperatures 30 °C below zero or higher	All year round	1.27	1.23	1.19
4. Southern regions	All year round	1.25	1.21	1.17
5. Tropical regions	All year round	1.23	1.19	1.15

If the temperature of electrolyte is other than 15 °C, allow corrections to hydrometer readings as tabulated in Table 3.

Table 3

Corrections to Hydrometer Readings, g/cm³

Electrolyte temperature, °C	Correction
+60	+0.03
+45	+0.02
+30	+0.01
+15	0.00
0	-0.01
-15	-0.02
-30	-0.03
-40	-0.04

Table 4

State of Battery Charge Versus Voltage

State of charge	Voltage indicated by battery cell tester, V
Fully charged	1.7-1.8
Discharged 25 %	1.6-1.7
Discharged 50 %	1.5-1.6

Recharge the battery when discharged more than 25 % in winter or 50 % in summer.

If the tractor is not to be operated for a month or a shorter period, disconnect the "-" terminal from the storage battery. In the case of discontinuation of the tractor use for a longer period, remove and recharge the batteries and store them indoors in a dry place at temperatures from zero to 30 °C below zero.

Storage of the batteries in the discharged state is absolutely impermissible. Failure to observe this rule is an open invitation to complete loss of serviceability of the battery due to sulphation of its plates.

10.4. Head Lamp Aiming

The head lamps must be aimed properly to insure correct lighting and avoid a dazzling effect on drivers of the opposing vehicles.

Position the tractor with its wheel tires inflated to the normal air pressure on a level ground square with an aiming screen so that the distance from the lamp lens to the screen is 5 m. The screen should be marked out as depicted. The "H" dimension depends on the tractor setup.

Setup	Low	Medium	High
H	745	891	952

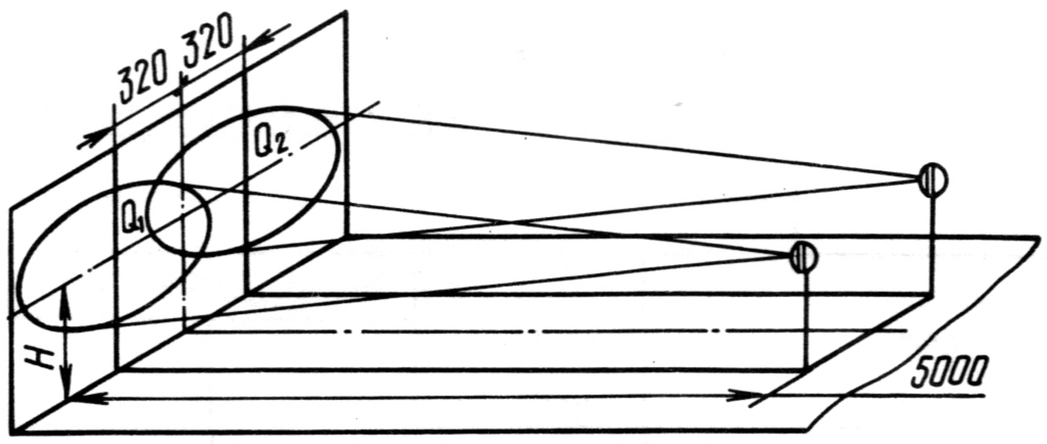

A wall may be used if a special screen is not available. Correct aiming is largely dependent on correct positioning of the tractor. Operate the dipswitch to make sure that the upper or lower beam filaments in the lamps are lighting simultaneously. Switch on the upper beam, cover one lamp with a light-tight material and set the other lamp so that the light spot is located on the screen as depicted. Aim the other lamp in the same manner and see that the centers of the two light spots are at the same height. The two lamps should give a common bright spot spread horizontally and intersected at the center by the tractor center line.

11. OPERATION WITH FARM MACHINES AND IMPLEMENTS

⚠

Approach an implement to be mounted on the tractor or trailed by it at the low gear and engine speed. Avoid jerks. See that there are no people between the tractor and implement. Stop and brake the tractor before coupling it to the implement.

Except for cases when the job requires slow running, try always provide an optimum load to the tractor. Underloading results in waste of fuel, while overloading makes the tractor's service life shorter. At full load, operate the tractor in the 1st-5th gears. The 6th gear is intended for transportation work and travel without cargo or implement. Do not shift to slow gears for increasing the tractor drawbar pull - these gears are designed for operation with machines with draft not exceeding 7200 N (720 kgf).

When doing agricultural work, the tractor is primarily used as a prime mover. On soft soil its driving wheels, as a rule, more or less slip. Slippage primarily depends on the implement draft resistance and tractor weight - - the wheels slip more as draft resistance increases and load on the driving wheels decreases.

Excessive slippage results in intensive wear of the tires, low performance and high consumption of fuel. To give the driving wheels a greater load for less slippage in operation with mounted machines, change the location of attachment of the central link front end (see page 30). Position the central link higher as the draft increases. Restore the initial position of the central link if the implement tends to raise.

Heavy cargo or mounted implements may affect steerability of the tractor by relieving its front wheels of load. If this is the case, install from two to eight frontal ballast weights on the tractor depending on the operation to be done.

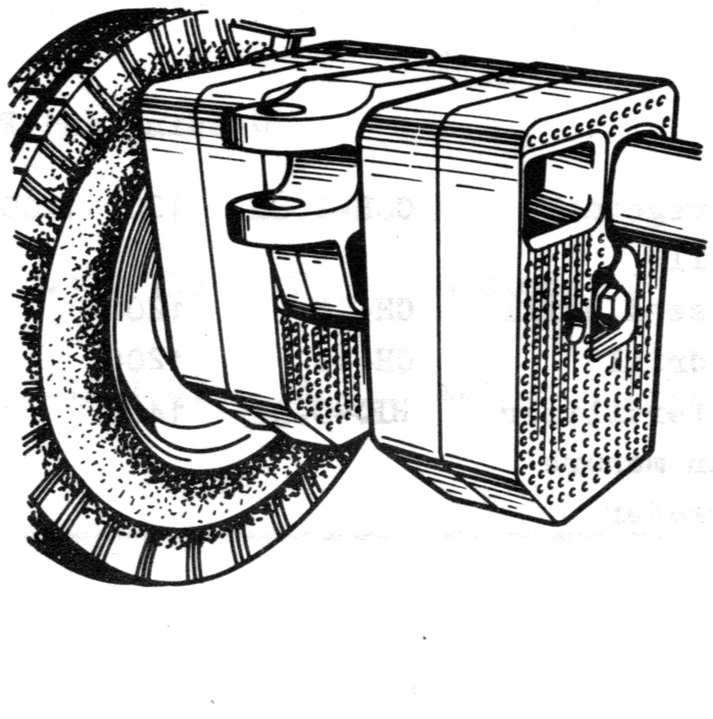

Table 5

Recommendations on Operation of Tractor with Farm Machines and Implements

Name	Model	Wheel track, mm		Tire pressure, MPa (kgf/cm^2)		Recommended number of ballast weights	Tractor setup	Gear
		front	rear	front	rear			
Universal Transport and Loading Facilities								
Single-axle trailer	ПТС-2Н	1400	1500	0.2(2.0)	0.11(1.1)	2	medium	I-VI
Universal mounted clamshell loader with bulldozer equipment	ПГ-0.2	1400	1400	0.14(1.4)	0.18(1.8)	8	medium	-
Universal unit with set of replaceable working tools	АВН-0.5	1200	1200	0.14(1.4)	0.18(1.8)	8	low	I
Attachment to АВН-0.5А unit for tilting containers	КОН-0.5	1200-1400	1200-1400	0.14(1.4)	0.18(1.8)	8	low	I
Fork lift for handling pallet loads and containers	ПВСВ-0.5	1200	1200	0.14(1.4)	0.18(1.8)	8	low	I
Soil Loosening and Rolling Implements								
High-speed toothed harrow	БЗСС-1.0	1200-1400	1100-1500	0.14(1.4)	0.09(0.9)	2	medium	IV
High-speed toothed harrow	БЗТС-1.0	1200-1400	1100-1500	0.14(1.4)	0.09(0.9)	2	medium	IV
Light toothed seed harrow	ЗБП-0.6	1200-1400	1100-1500	0.14(1.4)	0.09(0.9)	2	medium	I
Spring-tooth harrow	БП-12	1200-1400	1100-1500	0.14(1.4)	0.09(0.9)	2	any	II
Three-section light spike-tooth trailed harrow	3-ОР-07	1200-1400	1100-1500	0.14(1.4)	0.09(0.9)	2	medium	I
Disk orchard harrow	БДН-1.3А	1200-1400	1100-1500	0.14(1.4)	0.11(1.1)	2	medium	II
Single-section trailed water-ballasted roller	СКГ2-I	1200-1400	1100-1500	0.18(1.8)	0.11(1.1)	2	medium	II
Smooth water-ballasted roller	ЗКВГ-1.4	1200-1400	1100-1500	0.18(1.8)	0.11(1.1)	2	any	II
Hydraulically-operated mounted stone picker	УСК-07А	1400	1400	0.2(2.0)	0.18(1.8)	2	low	I-II
Seeding and Fertilizer Applicating Machines								
Mounted vegetable seed drill	СОН-2.8А	1200-1400	1200-1500	0.14(1.4)	0.18(1.8)	8	medium or low	I
Mounted seed drill	СН-10	1200	1200	0.22(2.2)	0.18(1.8)	2	low	I-II
Mounted drill	СН-16	1200	1200	0.14(1.4)	0.13(1.3)	4	low	I-II
Mounted fertilizer and green manure seed spreader	НРУ-0.5	1400	1500	0.14(1.4)	0.18(1.8)	8	low	I-IV

Table 5, continued

Name	Model	Wheel track, mm		Tire pressure, MPa (kgf/cm^2)		Recommended number of ballast weights	Tractor setup	Gear
		front	rear	front	rear			
Herbicide and Pesticide Spraying Machines								
Hydraulic mounted sprayer for nightshade crops	ОН-400	1200	1200	0.14(1.4)	0.18(1.8)	8	low	1
Low-volume pumpless sprayer	ОМБ-400	1200	1200	0.14(1.4)	0.18(1.8)	8	low	1
Universal mounted wide-coverage duster for flatland and hillside use	ОШУ-50	1200	1200	0.14(1.4)	0.18(1.8)	8	low	1
Hay Making and Raking Machines								
Mounted high-speed mower	КС-2.1	1400	1500	0.14(1.4)	0.12(1.2)	2	medium	II-IV
Mounted PTO-driven dump delivery mower	КПП-2	1200-1400	1100-1500	0.18(1.8)	0.11(1.1)	2	medium	I-II
Front-mounted mower	КНФ-1.6	1200-1400	1100-1500	0.14(1.4)	0.12(1.2)	2	high	I-II
Trailed pullrake	ГВК-6	1200-1400	1100-1500	0.18(1.8)	0.11(1.1)	2	medium	II
Semimounted hydraulic side-delivery folding rake	ГПП-6	1200-1400	1100-1500	0.18(1.8)	0.11(1.1)	2	medium	I
Machinery for Harvesting Vegetables, Flax, Fruits, Berries								
Mounted potato spinner	КТН-1А	1200-1400	1100-1500	0.2(2.0)	0.11(1.1)	2	medium	I-II
Front-mounted flax puller	ТЛН-1.5М	1400	1400	0.14(1.4)	0.1(1.0)	4	medium	I
Mounted flax stock picker	ПТН-I	1400	1500	0.14(1.4)	0.12(1.2)	6	medium	I
Flax turner	ОСН-I	1400	1500	0.14(1.4)	0.13(1.3)	6	high	I-III
Bean harvester	ФА-4А	1400	1500	0.14(1.4)	0.13(1.3)	2	high	I
Universal vegetable platform	ПОУ-2	1400	1400	0.14(1.4)	0.11(1.1)	2	high	II
Machine with hand-held electric vibrators for harvesting red currant and gooseberry	ЭЯМ 200-8	1200	1200	0.14(1.4)	0.14(1.4)	8	low	-
Stone-fruit and nut harvester (25 m^2 catch area)	ВСО-25	1200-1400	1100-1500	0.14(1.4)	0.14(1.4)	4	medium or low	-
Vineyard Machines								
Vine pruning pneumatic machine	ПАВ-8	1400	1500	0.18(1.8)	0.13(1.3)	2	medium	I
Mounted cut grapevine picker	ЛНВ-1.5А	1200	1200	0.14(1.4)	0.12(1.2)	2	medium	I-II

12. FUELS AND LUBRICANTS

High performance of the tractor is attainable only with the use of pure lubricants of grades recommended by the manufacturer (see Table 6). Abrasive impurities in fluid lubricants and grease, even found in very insignificant amounts such as particles from air, give rise to the higher wear of rubbing parts.

Store lubricants and fuel in clean capacities in places protected from dust, moisture, etc. Avoid filling the tractor with fuel and lubricants by the open method (for instance, by pouring fuel or lubricant from a bucket).

Characteristics of fuel and lubricants (viscosity or other characteristics) may be affected by considerable changes in the ambient air temperature. Therefore, when the average daily ambient air temperature rises higher or drops lower than 5 °C, fuel and lubricants in the tractor must be replaced by those of grades to suit the season.

Table 6

Fuels and Lubricants
(grades of Soviet origin and their equivalents manufactured abroad)

Lubrication or filling point	Capacity, volume, l	Grades of fuel, oil and grease		Foreign equivalents		
		main	substitute	classification, specification	Manufacturer	Name
Fuel tank	53	Diesel fuel, summer grade[1] Л-0.2-40	Л-0.5-40	ASTM 975-81 BS 2869-83 CAN 2-3.6-M-83		2D (USA) Class C1, C2, A1, D A2 (Great Britain) TYPe B (Canada)
		Diesel fuel, winter grade[2] 3-0.2 minus 35	3 -0.5 minus 35	ASTM 975-81 CAN 2-3.6-M-83		ID (USA) TYPe,A,AA (Can.)
Crankcase (1)	7	Engine oil, summer grade М10Г$_2$	М10В$_2$[3]	API CG, API CB SAE 30 MiL - L -2104B	Shell Mobil BP Exxon	Rotella TX 30 Rotella 30 Delvac 1230 Energol HD 30 Essolube HD 30
		Engine oil, winter grade М8Г$_2$	М8В$_2$[3]	APICG, API CB SAE 20	Shell Mobil BP Exxon	Rotella Tx20W/20, Rotella 20/20W Delvac 1220 Energol HD 20W Essolube HD 20
Injection pump (2)	0.1	Engine oil for crankcase				
Air cleaner sump (13)	0.8	Settled scavenge engine oil				
Hydraulic system tank (11)	5.85	Oil, summer grade И20А or И30А М10В$_2$		ISO 3498-HH/CB-32	Shell Mobil BP	Vitrea 32 Vacuoline Light Energol CS 32
				ISO 3498-HH/CB-46	Shell BP	Vitrea 46 Carnea 46 Vacuoline Medium Energol CS 46 or equivalents of М10В$_2$

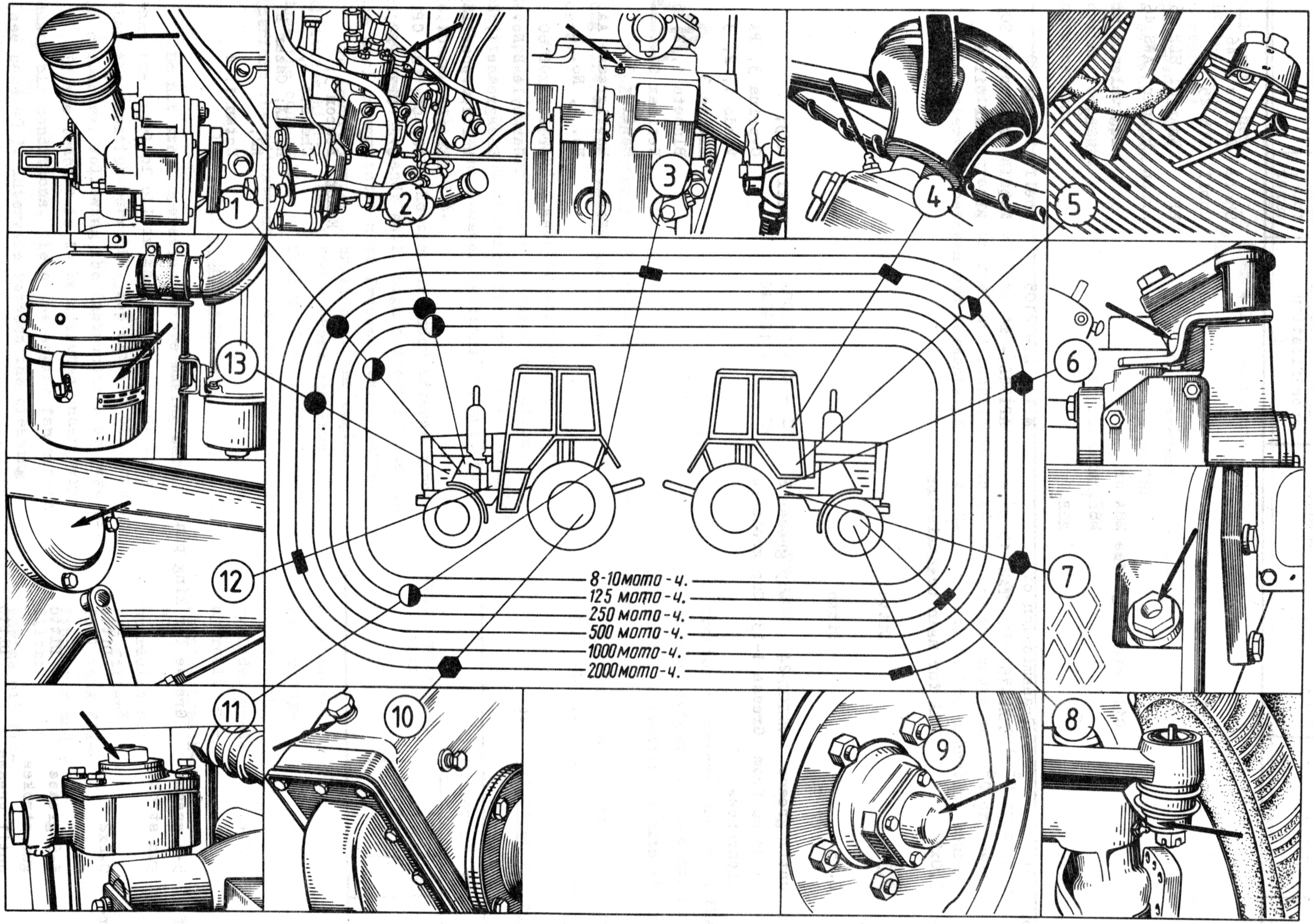

8-10 operating hours
125 operating hours
250 operating hours
500 operating hours
1000 operating hours
2000 operating hours

Engine oil ◑ topping up ● replacement
Transmission oil ◑ topping up ⬢ replacement
Cup grease ▮

Table 6, continued

Lubrication or filling point	Capacity, volume, l	Grades of fuel, oil and grease		Foreign equivalents		
		main	substitute	classification specification	Manufacturer	Name
		All-weather oil МГ-30			Shell	Tellus C 46
					Mobil	DTE-25
					BP	Energol HLP 46
					Exxon	Hyspin AWS 46
		Oil, winter grades М8А or $М8Б_1$ or $М8В_2$				Equivalents of $М8В_2$
Main transmission housing (7)	10	Transmission oil ТЭП-15	ТАП-15 В	Mil - L - 2105 API GL - I	Shell	Dentax 90
					Mobil	Mobilube C 90
					BP	Gear Oil 90
Final drive housing (10)	3.0x2	**Oil for main transmission**				
Hydraulic pump drive housing (6)	0.3	Ditto				
Steering gear case (5)	0.75	Ditto				
King pin (8)	until grease shows up from clearances	ЛИТОЛ-24 Grease 1-13	Cup grease Ж Cup grease С	MI - G - 18709A MI - G - 10924C	Shell	R 3; Cyprina 3, PA Vuedo 1, 2, 3 Livona 3 Blameta 1, 2, 3 Retinax C Mobilux 3
					Mobil	Mobilgrease AA No. 1, No. 2
					BP	Greasrex D 60 Gargoyle B No. 2 Energrease 1, 2 Multipurpose LS3 Energrease C1, C2, C3, CA, CP1, CP2, CP3, PR2, PR3
					Exxon	Beacon 3; Chassis L, H, XX; Cazar K1, K2; Estan 1, 2
Upper bearing of steering column (4)	5-6 grease gun strokes	Grease for king pin				
Front wheel bearing (9)	0.2x2 full cap	Ditto				
Clutch release bearing (12)	5-6 grease gun strokes	Ditto				
Lift linkage shaft (3)	until grease shows up from clearances	Ditto				

Table 6, continued

Lubrication or filling points	Capacity, volume, l	Grades of fuel, oil and grease		Foreign equivalents		
		main	substitute	classification specification	Manufacturer	Name
Fuel tank (when placing tractor in storage)	0.2 (per 4 l of fuel)	Corrosion inhibitor AKOR-1				
Open metal surfaces (when placing in storage)		Rust-preventive compound ЗВВД-13 or ИВВС				
Terminal contacts and wire lugs		Petrolatum ВТБ-I				

1)- summer grades of fuel and lubricants to be used at temperatures 5 °C or higher
2)- winter grades of fuel and lubricants to be used at temperatures 5 °C or lower
3)- intervals between replacements of oil to be decreased to 250 operating hours

13. MAINTENANCE

Proper and timely maintenance is essential to long life of the tractor and saves failure removal costs.

The recommended tractor maintenance schedule (see page 41) applies to averaged operational conditions. The maintenance intervals are specified on the basis of hour-meter readings and must be followed within ±10 %.

Operation of the tractor under adverse conditions (desert, sandy soil, high content of dust in the air) necessitates more frequent maintenance.

To insure proper operation of the engine at altitudes higher than 1,500 m above sea-level, reduce the consumption of fuel to G = 4.57-4.3 kg/h (perform the adjustment at a repair shop).

13.1. Daily Maintenance

Do not start operation before making sure that the level of oil in the engine is not lower than the dipstick mark "H". Top off the oil level, if necessary, following the instructions on page 46.

If the tractor is to be operated under very dusty air conditions, clean the engine fan screen (see page 43). Intervals between the cleaning operations depend on the degree of air dustiness.

When operating the tractor on stony soil or under other adverse conditions, regularly inspect the tractor to detect faults in the undercarriage, protective devices and external fastenings. Pay particular attention to nuts which attach the wheels.

Be sure to avoid burning up fuel. Otherwise, the fuel delivery system will draw in air.

13.2. Maintenance Schedule

Maintenance operation	Interval, operating hours						Procedure description, page
	8-10	125	250	500	1000	2000	
Wash (clean):							
ribs of cylinders and cylinder heads	+						43
hydraulic mechanism breather*							47
hydraulic system filter*							48
fuel tank filling neck and filter			+				45
engine oil filter		+					46
injection pump breather		+					45

Continued

Maintenance operation	Interval, operating hours						Procedure description, page
	8-10	125	250	500	1000	2000	
coarse fuel filter				+			43
air cleaner				+			45
ventilation holes in storage battery plugs		+					54
terminals and wire clamps		+					54
Wipe dry top surface of storage batteries		+					54
Check and, if necessary, top up oil in:							
engine crankcase	+						46
fuel pump housing		+					45
hydraulic system tank		+					47
steering gear housing					+		50
Check and, if necessary, top up distilled water in storage batteries		+					54
Change oil in:							
engine crankcase				+			46
injection pump housing			+				45
air cleaner sump				+			45
main transmission housing					+		48
final drive housings					+		48
hydraulic pump housing					+		48
hydraulic system tank*							47
Replace fine fuel filter				+			43
Lubricate:							
king pin bushings		+					50
front wheel bearings					+		50
steering column upper case				+			50

Continued

Maintenance operation	Interval, operating hours						Procedure description, page
	8-10	125	250	500	1000	2000	
terminal posts and wire lugs		+					54
clutch release bearing					+		51
lift linkage shaft					+		48
Check and adjust, if necessary:							
fan belt tension		+					50
tire pressure		+					55
steering wheel play			+				48
free travel of clutch pedal and interlock mechanism			+				51
free travel of brake pedals			+				51
hand brake lever play				+			52
valve-to-rocker clearances				+			53
injectors (atomization quality)**					+		45
injection pump**						+	45
steering gear joints					+		50
front wheel bearing axial play						+	49
front wheel toe-in					+		49
alternator**					+		55
Check starter for serviceability**						+	-
Check condition of wiring				+			-
Check state of battery charge and, if necessary, recharge batteries**					+		54
Determine engine power and hourly consumption of fuel**					+		-

* Operation to be done when giving the tractor seasonal maintenance

** Operation to be done at a repair shop

13.3. Seasonal Maintenance

Seasonal maintenance is performed to change over the tractor from the summer to winter working period and vice versa, as a rule, concurrently with routine maintenance.

As the average daily air temperature settles at a level higher than 5 °C above zero, do the following:

set alternator switch 1 to the "Л" (summer) position;

to remove the throttle plate from under the fan shroud, open catches which fix the shroud, remove the shroud, remove the plate, install the shroud back in place;

change oil in the engine crankcase, injection pump housing and hydraulic tank* according to the Lubrication Table (page 38).

As the average daily air temperature settles at a level lower than 5 °C above zero, do the following:

set the alternator switch to the "З" (winter) position;

fit the throttle plate inside the fan shroud;

change oil in the engine crankcase, injection pump housing and hydraulic tank* according to the Lubrication Table.

---

* If the tank is filled with oil of МГ 30 grade, no oil changing is needed.

14. MAINTENANCE PROCEDURES

14.1. Cleaning and Washing the Tractor

Open clamp 2 and move the hood forward.

Open clamps 1 and remove fan shroud 4. Undo wing nuts 3 and remove the fan screen. Undo wing nut 6 and remove middle deflector 7.

Use a wooden scraper and brush to clean and wash fining 5 of the cylinders and cylinder heads on both sides of the engine. Wash and brush the screen and other parts of the tractor.

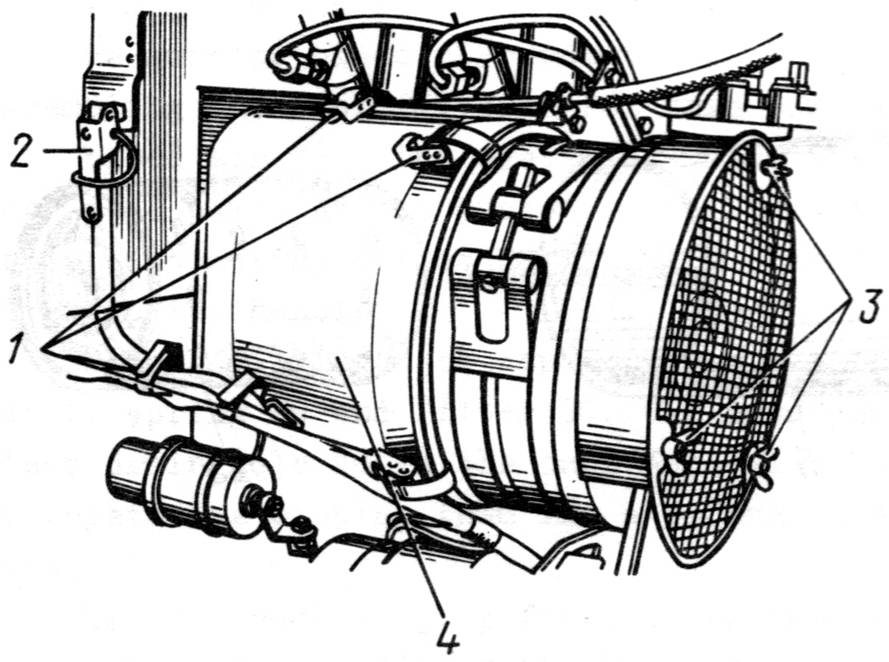

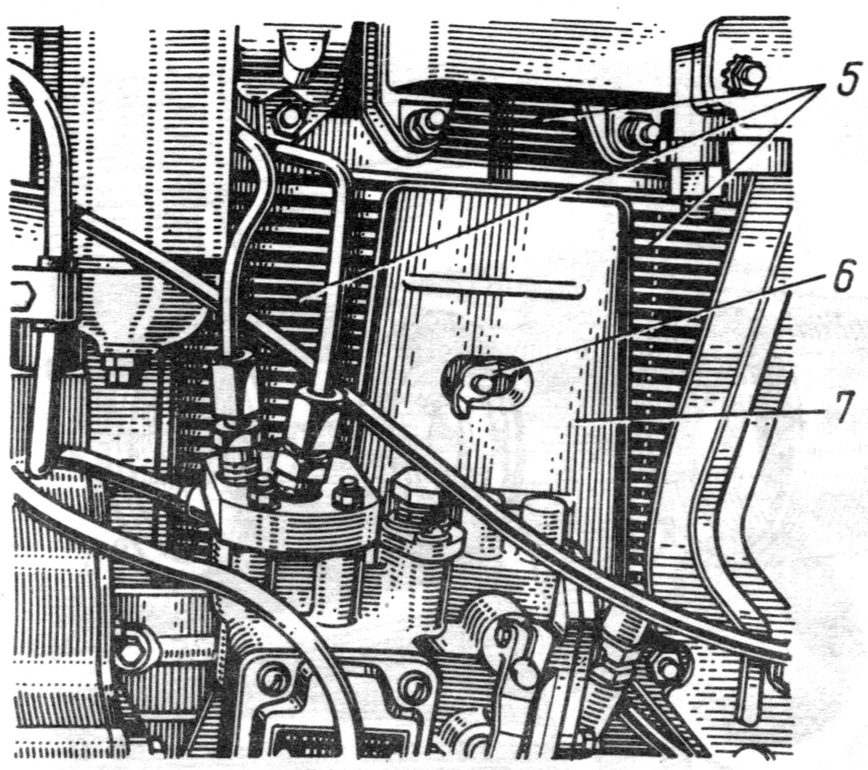

14.2. Servicing the Fuel System

14.2.1. Servicing the Fuel Filter

The tractor may come equipped with a separate or combined coarse and fine fuel filter.

Do the following to service the separate filter;

unscrew bolts 3 and remove barrel 2;

unscrew coarse filter element 22;

undo nuts 7 and remove barrels 6;

remove filter elements 23, rubber sealings, rings, washers, and springs;

wash the removed parts by repetitive dipping in a detergent solution (50 g of detergent Labomid 203 or КМГ + 10 l of water);

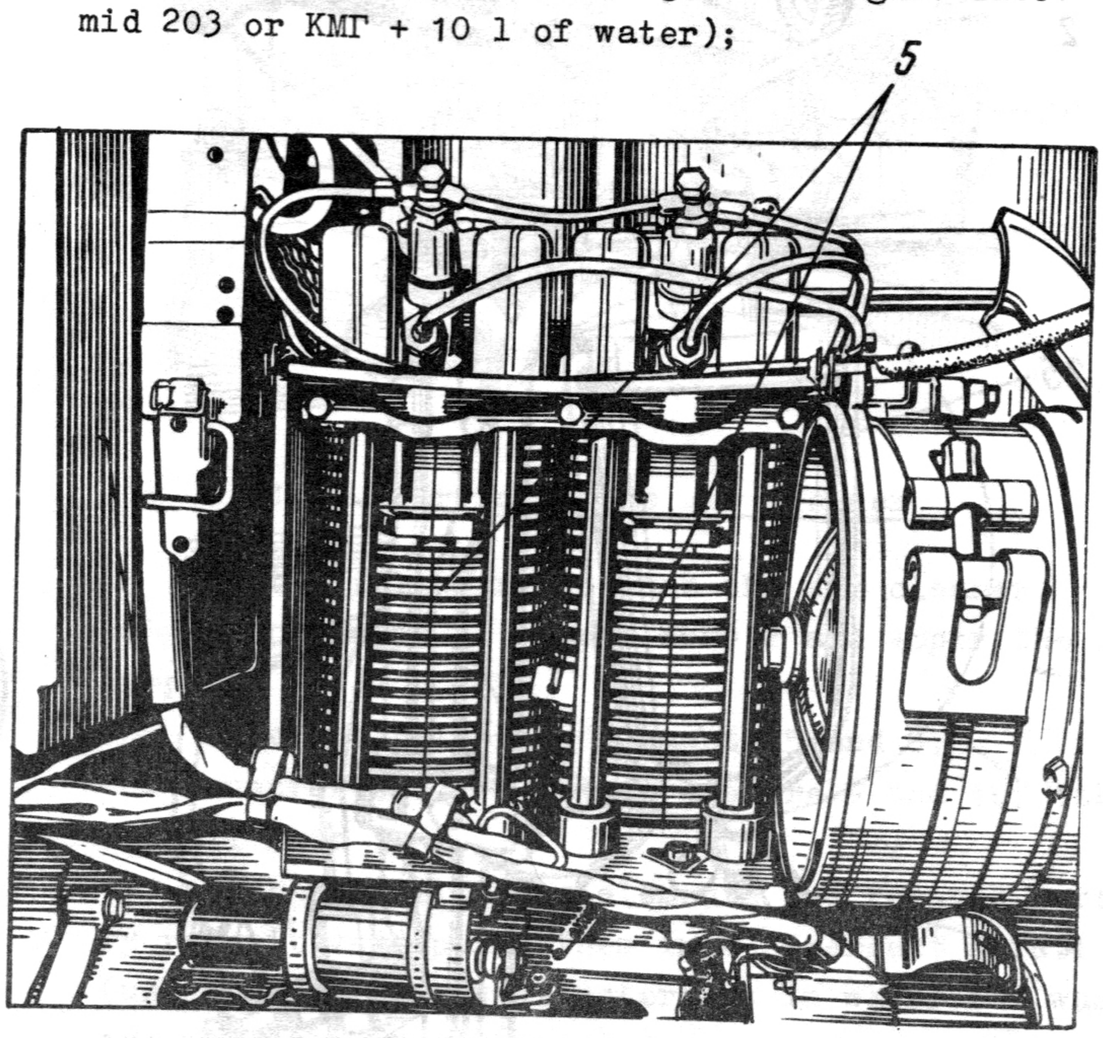

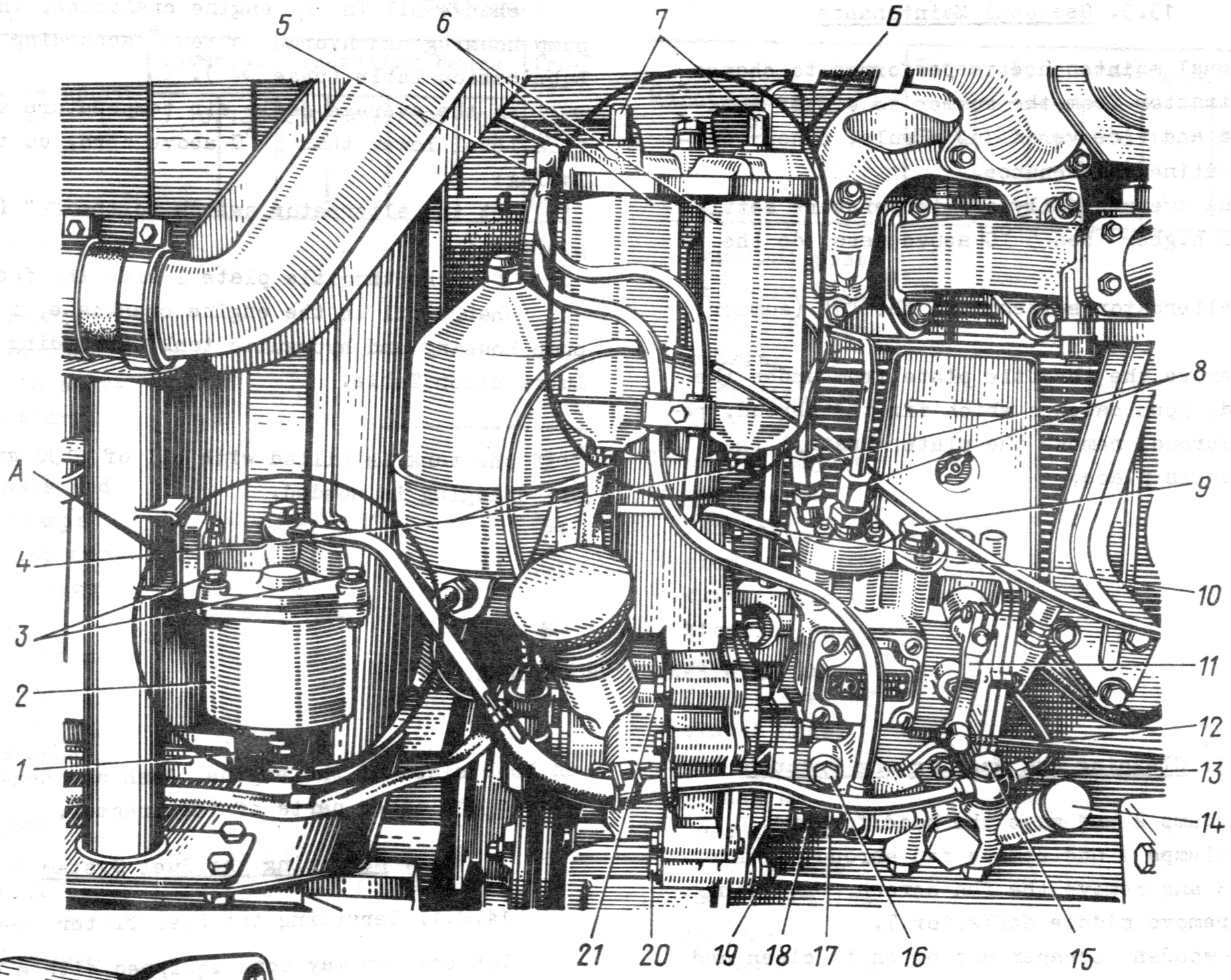
5
6
7
6
8
9
10
11
12
13
14
15
16
17
18
19
20
21
A
4
3
2
1

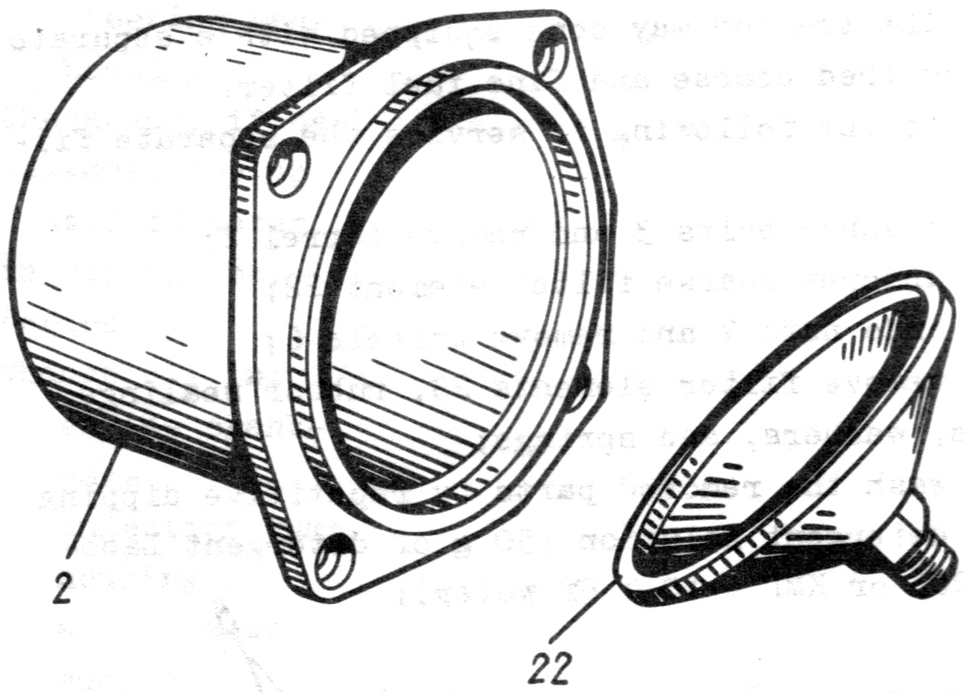
2
22

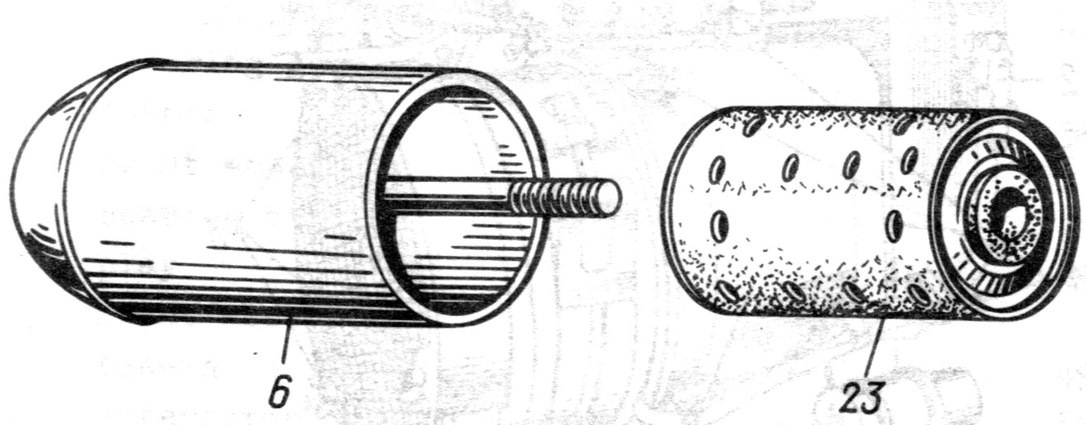
6
23

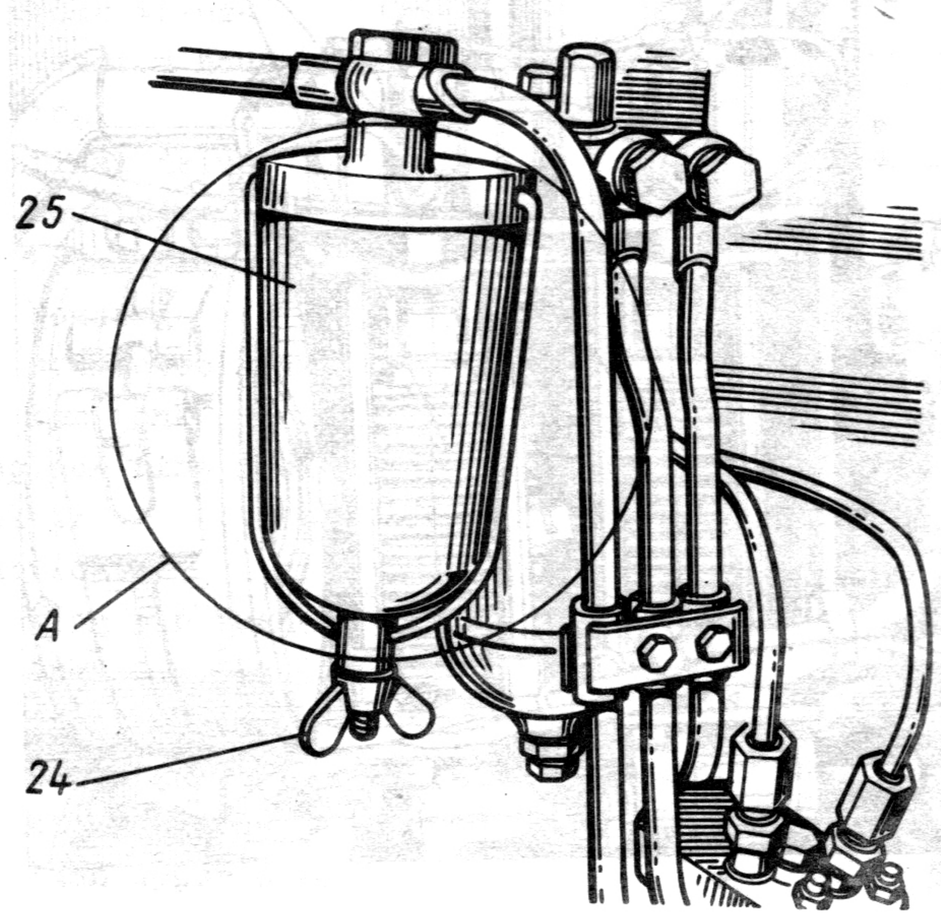
25
A
24

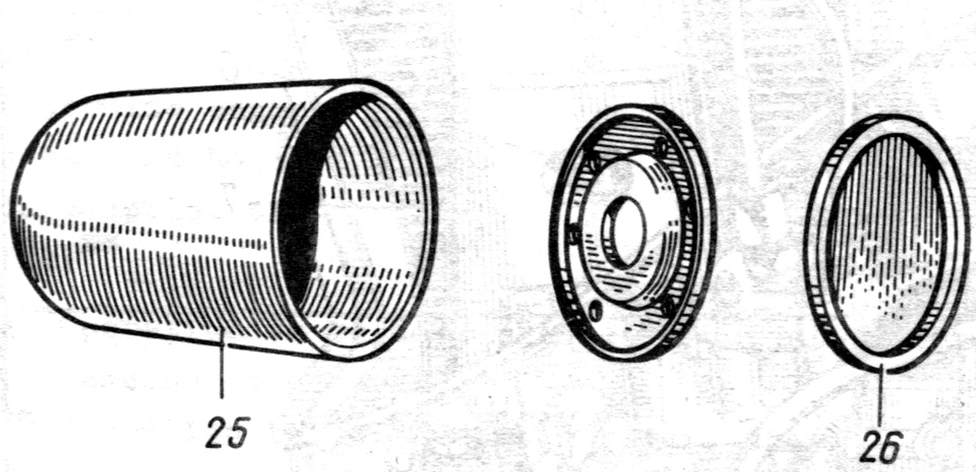
25
26

substitute new elements for the removed ones and install the removed parts back in place.

Unlike the separate filter, the combined one encloses the coarse and fine filters in one housing (i.e. the coarse filter is installed instead of the second fine filtering element).

To service the combined fuel filter, do the following:

undo wing nut 24, remove cap 25 and screw out screen 26.

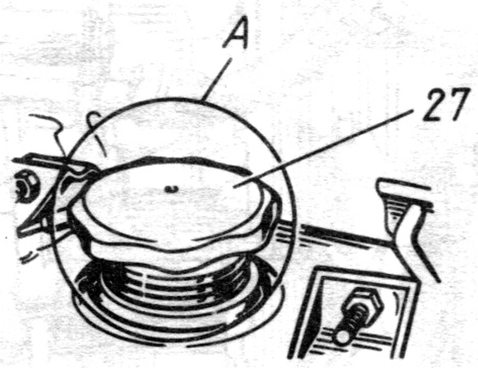

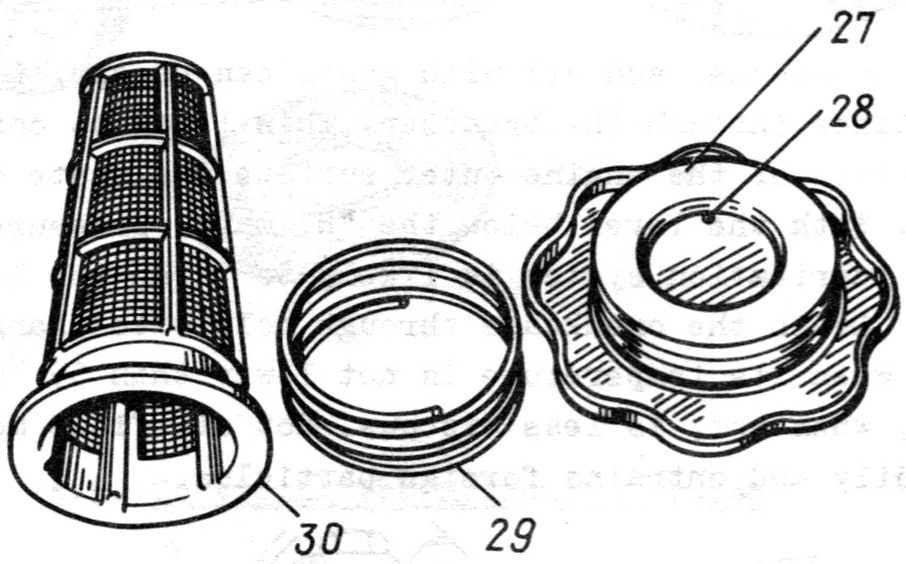

Plugs 1 and 4 serve to drain fuel.

Be sure to bleed air from the fuel system upon assembling the fuel filters. For this purpose:

bleed air from the system by using the hand fuel feed pump. As the system is filled with fuel, the reciprocating motion of its handle is impeded. Screw up the handle.

Remove filling neck cap 27, take out the dipstick, spring 29 and filter 30. Use a wooden pin to clear drain hole 28 in the cap. Wash all the parts by repetitive dipping them in a detergent solution.

Use a wrench to grip faces 31 of fuel cock 32 for opening the cock to drain fuel from the tank.

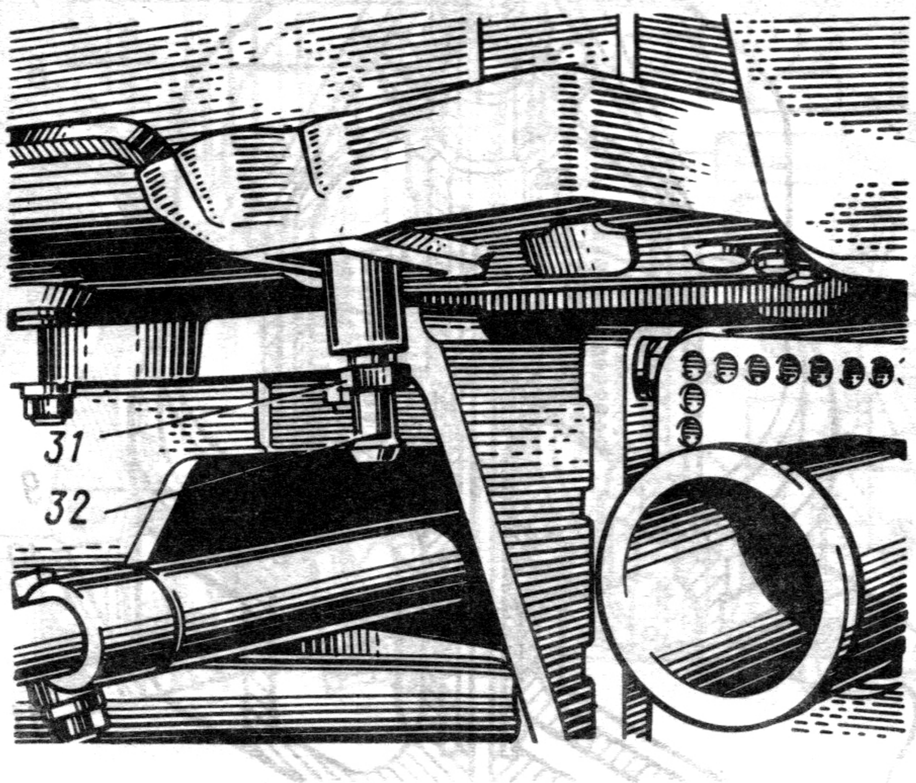

14.2.2. Servicing the Injection Pump and Injectors

Oil must be level with the lower edge of hole 16. When changing oil, drain it through hole 18. Pour oil in hole 9. Wash the breather by repetitive dipping it in a detergent solution.

Adjust the injection pump and injectors at a repair shop with the use of a special bench. To dismantle the pump and injectors, do the following:

unscrew high pressure tube unions 33 and nuts 35;

unscrew nuts and remove the valve caps;

unscrew nuts 34 and remove the injectors;

unscrew nut 13, unions 15 and 17 and union which couples tube 10 to the pump, loosen or unscrew unions 5 and remove the tubes;

unscrew nuts 8 and remove the high pressure tubes;

detach link 12 from lever 11;

unscrew nuts and remove the filling neck;

unscrew bolts which attach the strip and flange to the injection pump driving gear;

unscrew nuts 19, bolts 20 and 21, and remove the injection pump.

Before transportation or short-term storage of the injection pump and injectors, seal the holes for unions and tubes.

To install the injection pump and injectors, proceed in reverse order. See that there are gaskets under the unions and tubes. Bleed air from the fuel system upon installation of the pump (see page 43). Start up the engine and check the tubes for leaks.

14.3. Servicing the Air Cleaner

Do the following to wash the air cleaner:

open clamps 1, remove sump 2 and empty the sump;

take out filtering elements 5 and 6;

unscrew nut 11, remove washers 9 and 10, take out oil bath 7;

wash the filtering elements and removed parts by repetitive dipping them in a detergent solution (use only solutions of detergent in water for washing the filtering elements).

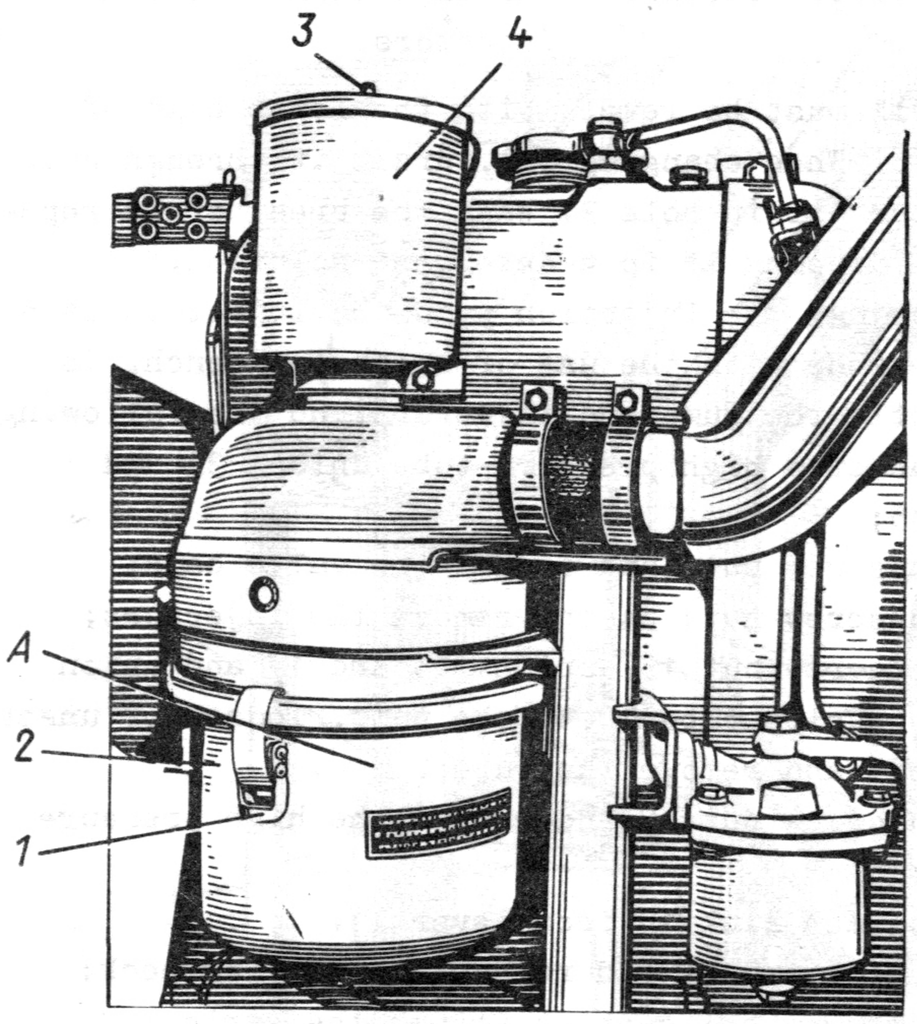

Upon washing, dry the filtering elements and fit them in the air cleaner housing. Fill the sump with fresh or scavenge oil to lower mark 8 and install the sump back in place.

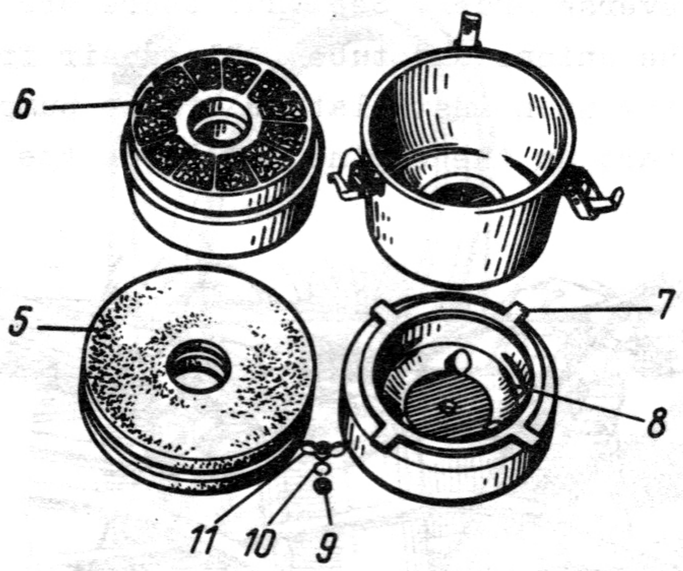

The level of oil in the sump must not be higher than the lower mark. Otherwise, oil will be drawn in the engine cylinders resulting in excessive gumming.

Use a piezometer to test the suction pipe-lines for leak-proofness upon starting up the engine.

14.4. Servicing the Lubrication System

Shut down the engine and wait 10-15 minutes, then wipe it with a piece of cleaning cloth and use dipstick 1 to check the level of oil. The delay is needed to let the oil flow down into the crankcase. The level must be between the "H" and "B" marks on the dipstick. Remove plug 3 before pouring oil through filling neck 2.

Do not operate the tractor with the level of oil above the "B" or below the "H" mark. Too high level of oil results in excessive gas pressure in

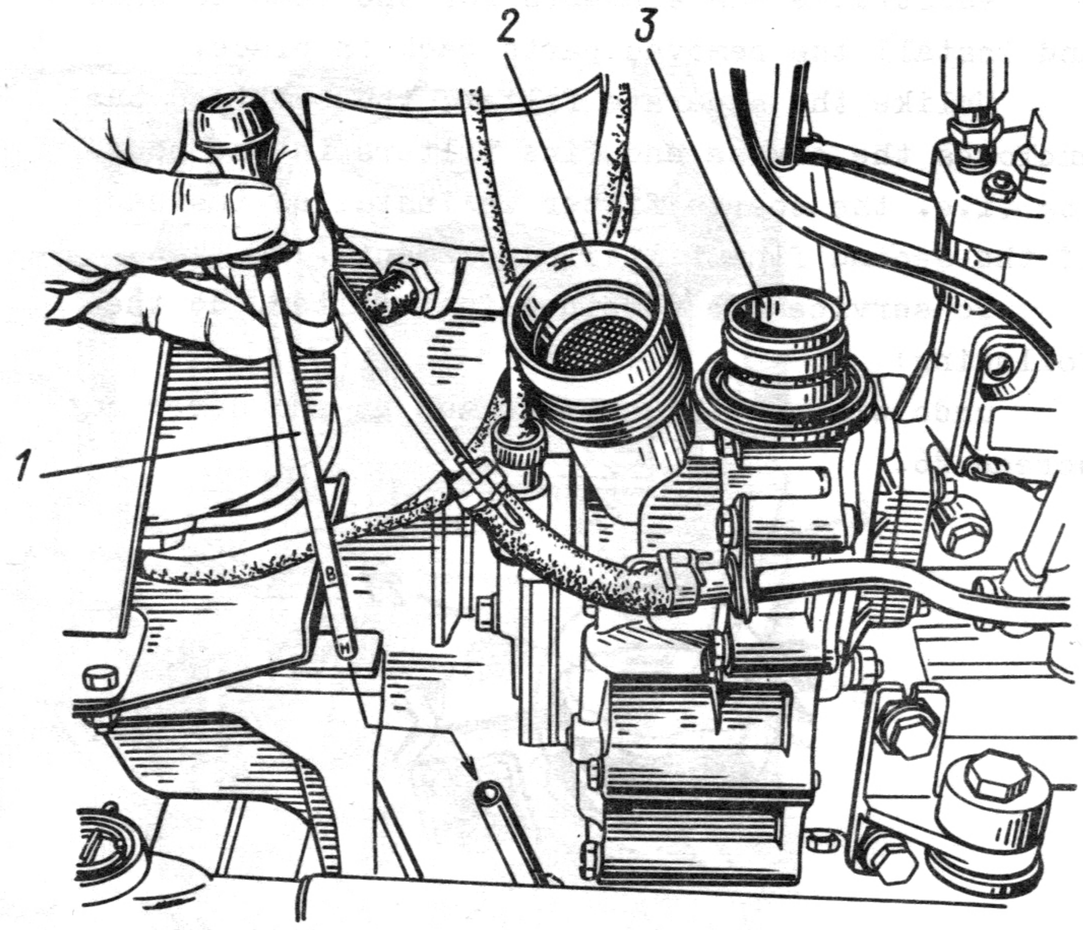

the crankcase, and oil with gases can escape, for instance through the breather. This leads to contamination of the engine outer surface and waste of oil. With the level below the "H" mark, pressure in the lubrication system is likely to drop too low.

Drain the crankcase through hole 4 to change oil when its temperature is not lower than 55 °C. Oil, when hot, is less viscous. Hot oil flows more readily and entrains foreign particles.

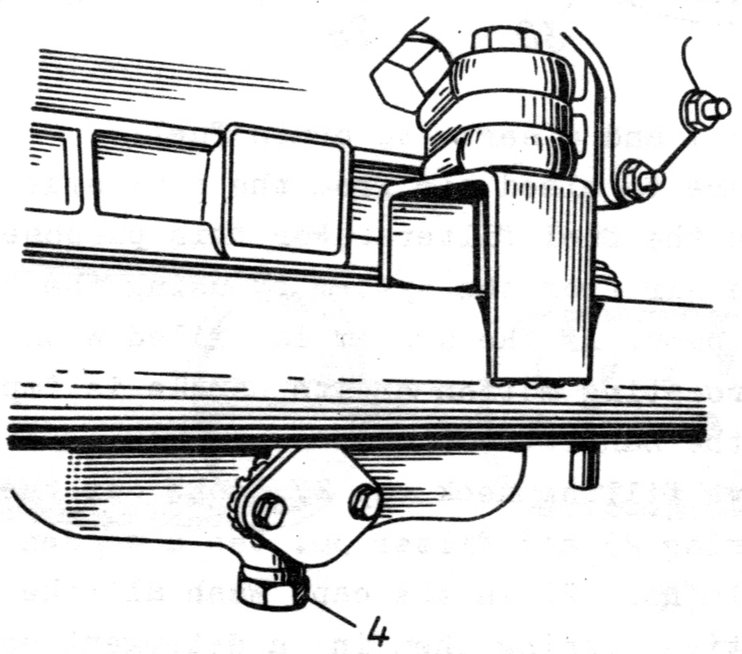

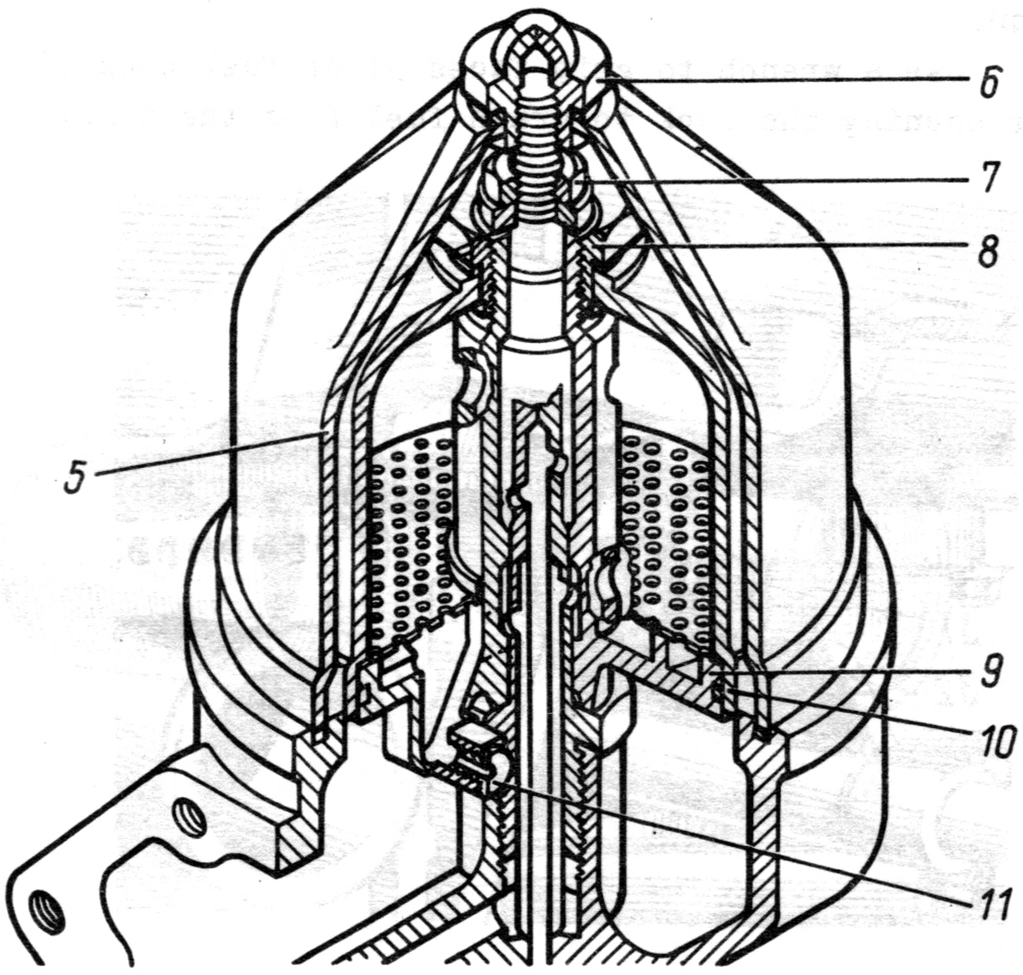

Wash the oil filter when changing oil. For this purpose, undo nut 6, remove cap 5, undo nut 7 and remove rotor 9. Undo nut 8 and disassemble the rotor, screw out nozzles 11.

Clean cap 10 from sediment using a wooden scraper. Use a brass wire to clear the nozzle holes. Wash all the filter parts. Upon assembling, see that the rotor is free to rotate.

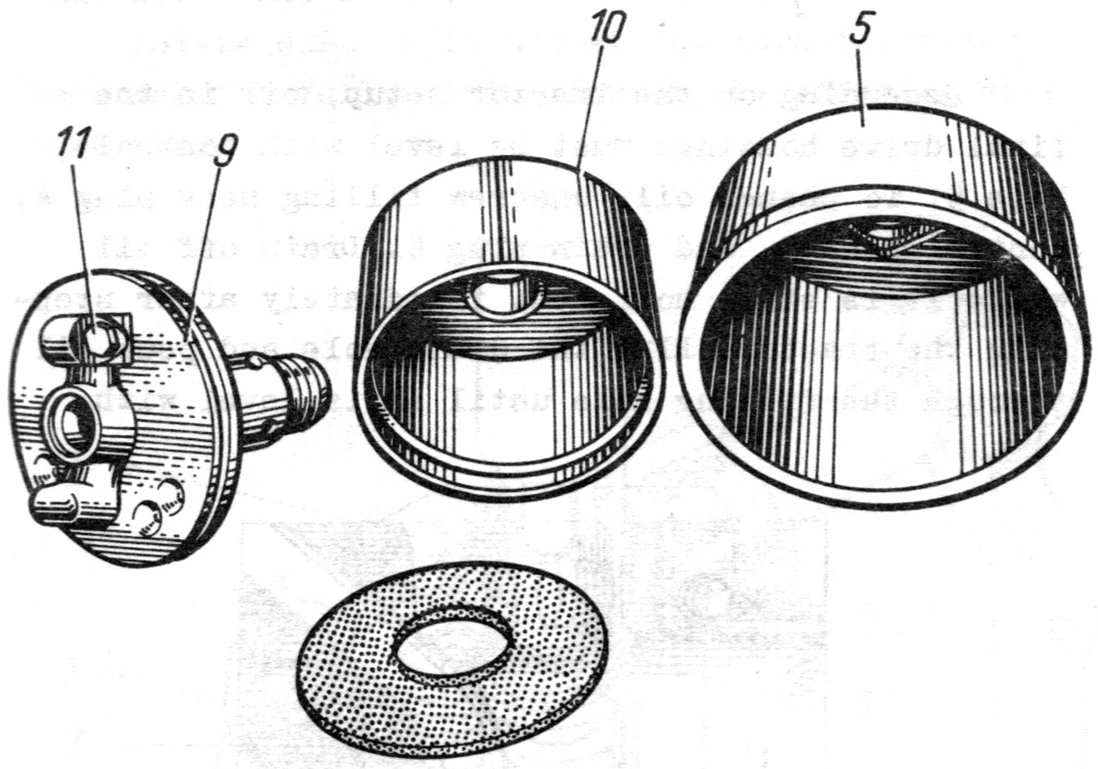

14.5. Servicing the Hydraulic System



Pressure in the system is so high that in case of accidental gushing out, for instance, through a poor seal, a jet of fluid can damage human skin. Before detaching the pipe-lines, be sure to throw off pressure by, for instance, setting the hydraulic control lever to the floating position. Before opening the system to pressure, make sure that all the pipe-lines are in good repair and coupled reliably. To avoid inflammation, if a jet of fluid injures your skin, be sure to ask for medical aid immediately.

When checking the level of oil using a dipstick, see that the hydraulic cylinder rod is fully retracted. The level of oil must be between the upper mark "П" and lower mark "Н" (do not screw in the dipstick in checking the level). Wipe the dipstick with a piece of cleaning cloth before using. Pour oil through the oil filling hole.

Do not operate the tractor with the level of oil too high or too low. In the first case oil may escape through the breather, in the other case the amount of oil may be insufficient to raise the implement to full height. Unscrew plug 2 before topping off.

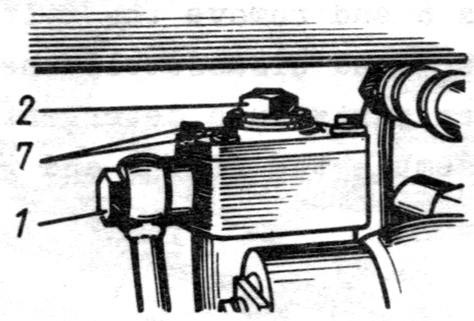

In changing oil, drain it off while it is still hot through hole 5.

Screw out breather casing 4, remove dummy plug 9 and filter 8 to wash the breather stuffing. Wash it by repetitive dipping in a detergent solution. Assemble the breather and install it back in place.

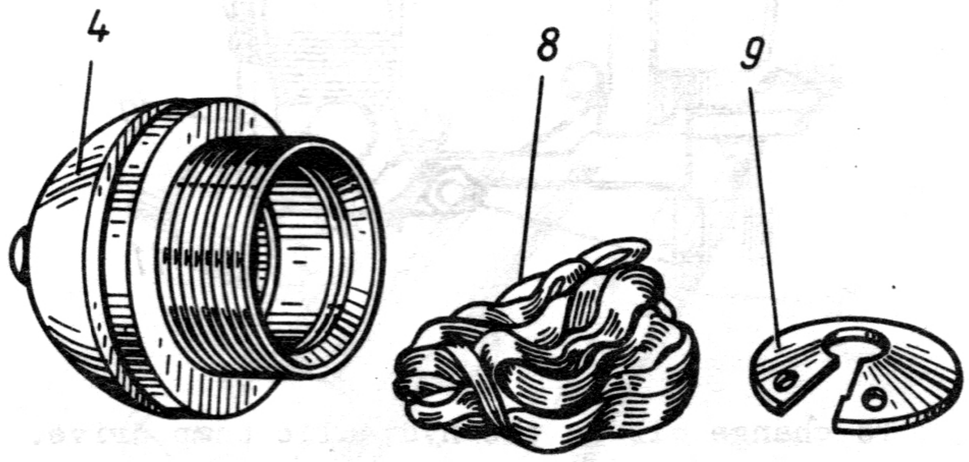

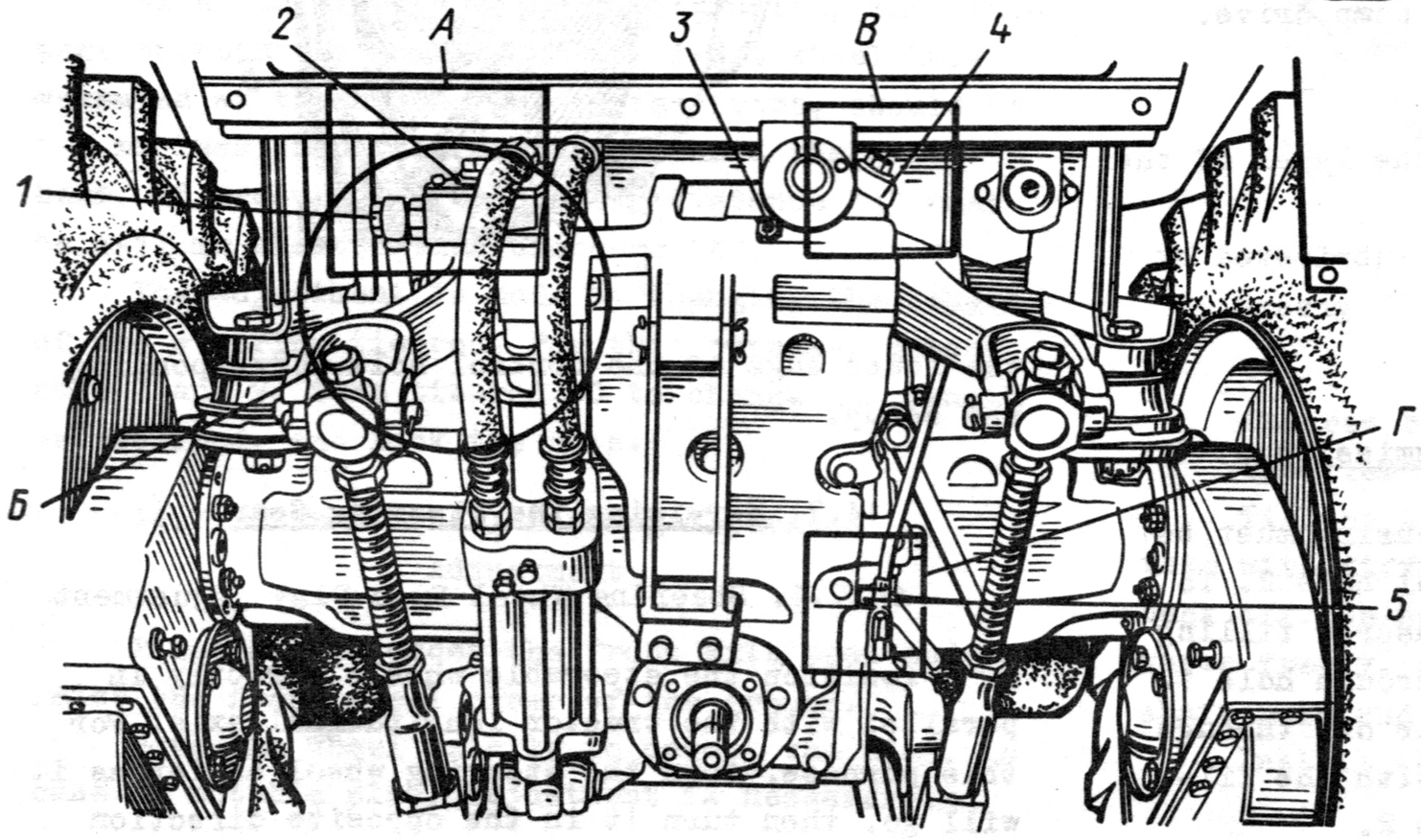

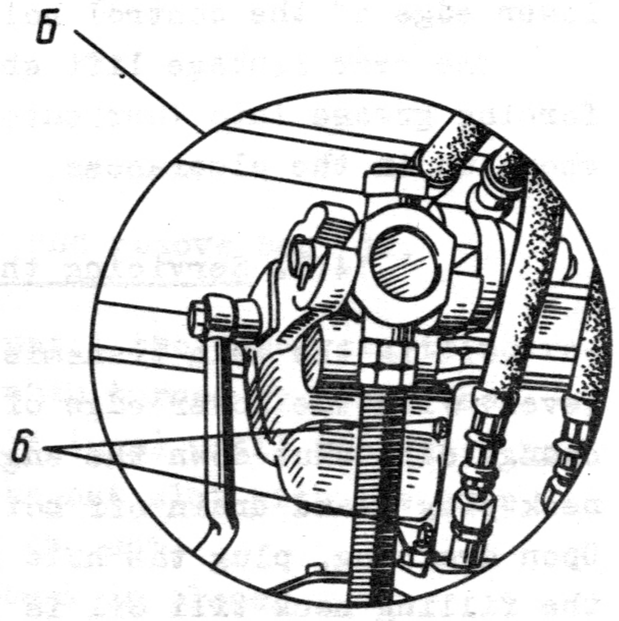

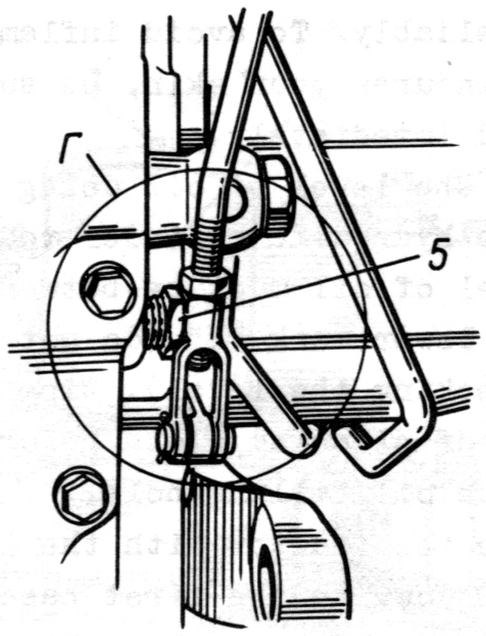

To wash the hydraulic system filters, do the following:

unscrew union 1;

unscrew bolts 6 and remove the filter housing;

unscrew bolts 7 and disassemble the filter;

dip the filter parts in a detergent solution several times, assemble the filter and install it back in place.

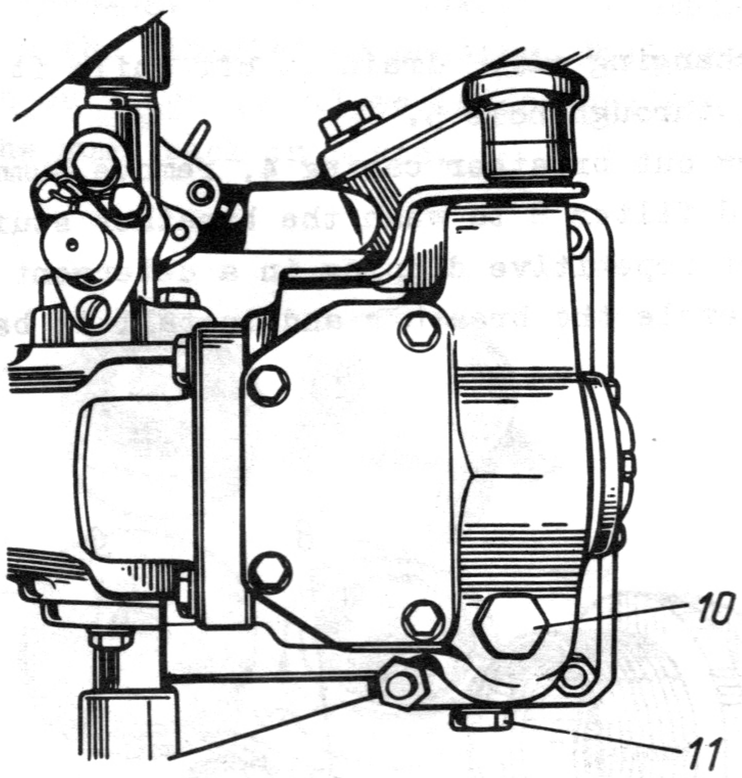

To change oil in the hydraulic pump drive, proceed as follows:

drain off oil through hole 11;

put in oil through hole 10 to the level of the lower edge of the control hole.

The rear linkage lift shaft is lubricated by forcing grease into lubricator 3 until grease shows up in the clearances.

14.6. Servicing the Transmission

Oil in the main transmission housing must be level with the lower edge of control hole 2. To change oil, shut down the engine, unscrew filling neck plug 3 and drain off hot oil through hole 1. Upon draining, plug the hole and pour oil through the filling neck till oil is level with the filling neck lower edge or control hole 2.

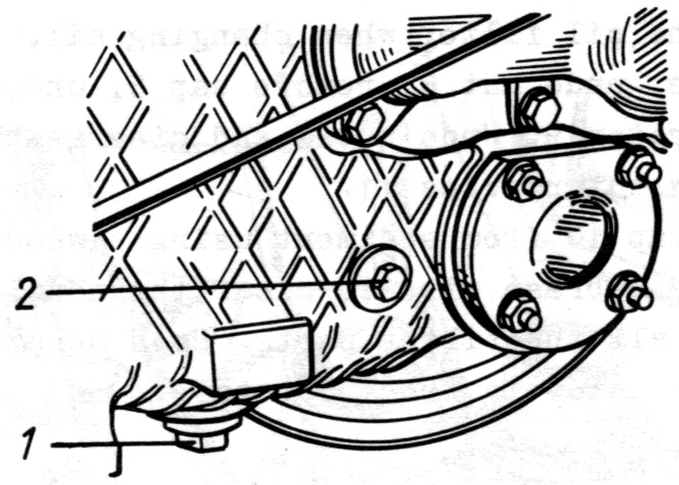

Depending on the tractor setup, oil in the final drive housings must be level with control hole 5. To change oil, unscrew filling neck plug 4, control plug 5, and drain plug 6. Drain off oil while it is still hot, i.e. immediately after stopping the tractor, Plug the drain hole and pour oil through the filling hole until it is level with

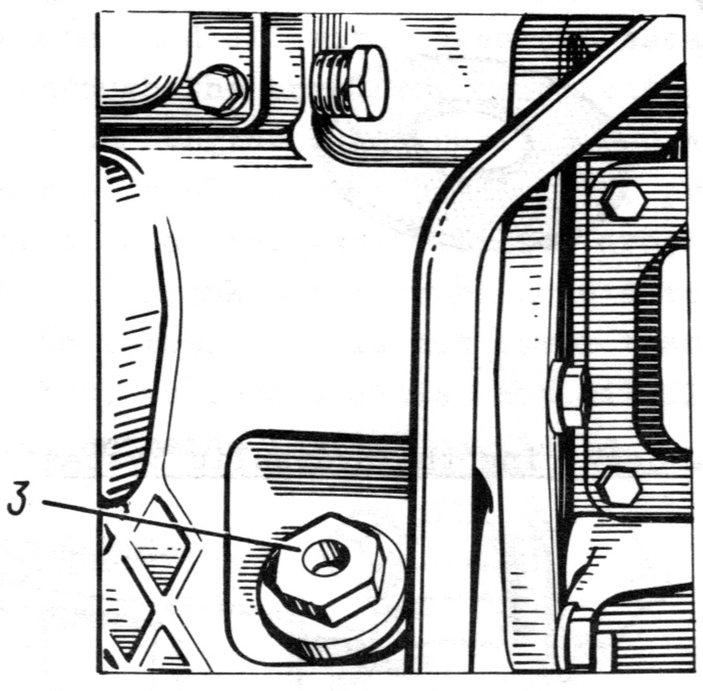

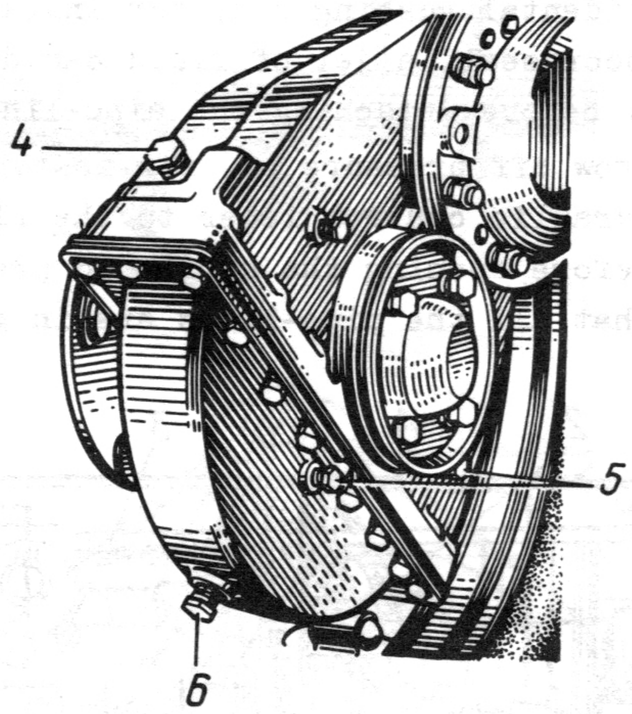

the lower edge of the control hole corresponding the setup.

14.7. Servicing the Steering Gear

14.7.1. Steering Wheel Free Play Adjustment

Position the steerable wheels strictly in parallel with the tractor longitudinal axis. For this purpose, turn the steering wheel as far as it will go, then turn it in the opposite direction

while counting the revolutions. Turn the wheel back through a half of number of revolutions.

The steering wheel free play must not be greater than 20°. If this limit is exceeded, check and eliminate the play in joints of steering rods. For this purpose, uncotter plug 8 and tighten it up until the play is eliminated.

Upon eliminating the play, cotter the plug and undo nut 1 and remove lock washer 3.

Rotate screw 2 to adjust the worm-to-roller backlash for full elimination of the steering wheel free play.

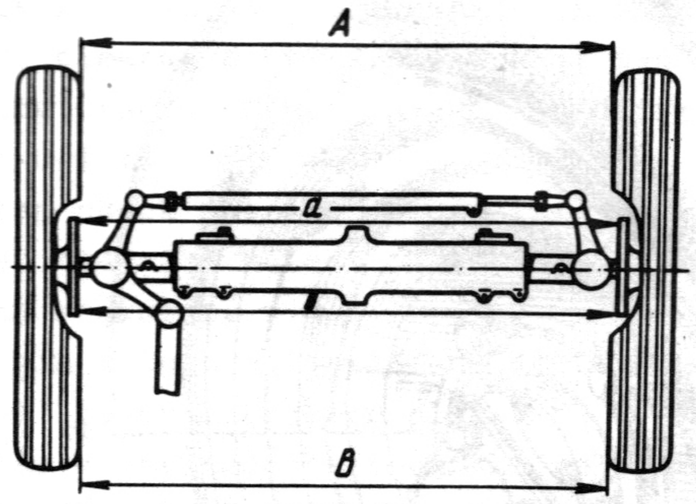

a < B на 1-3мм
A < B на 4-11мм

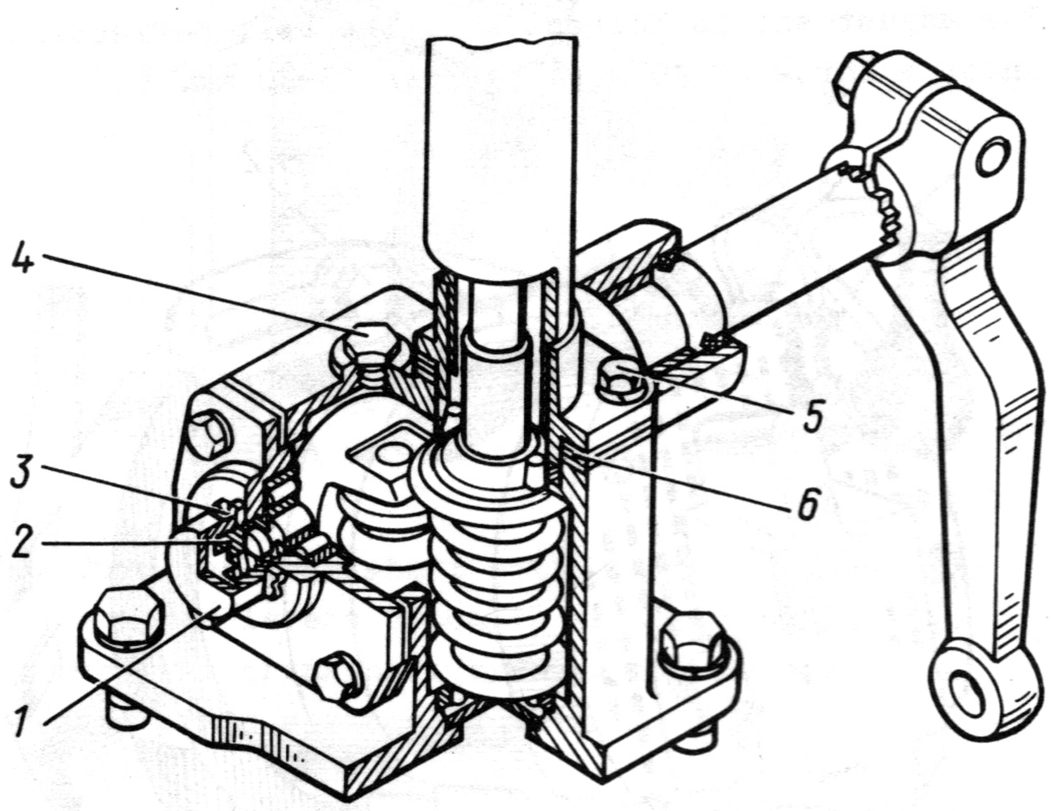

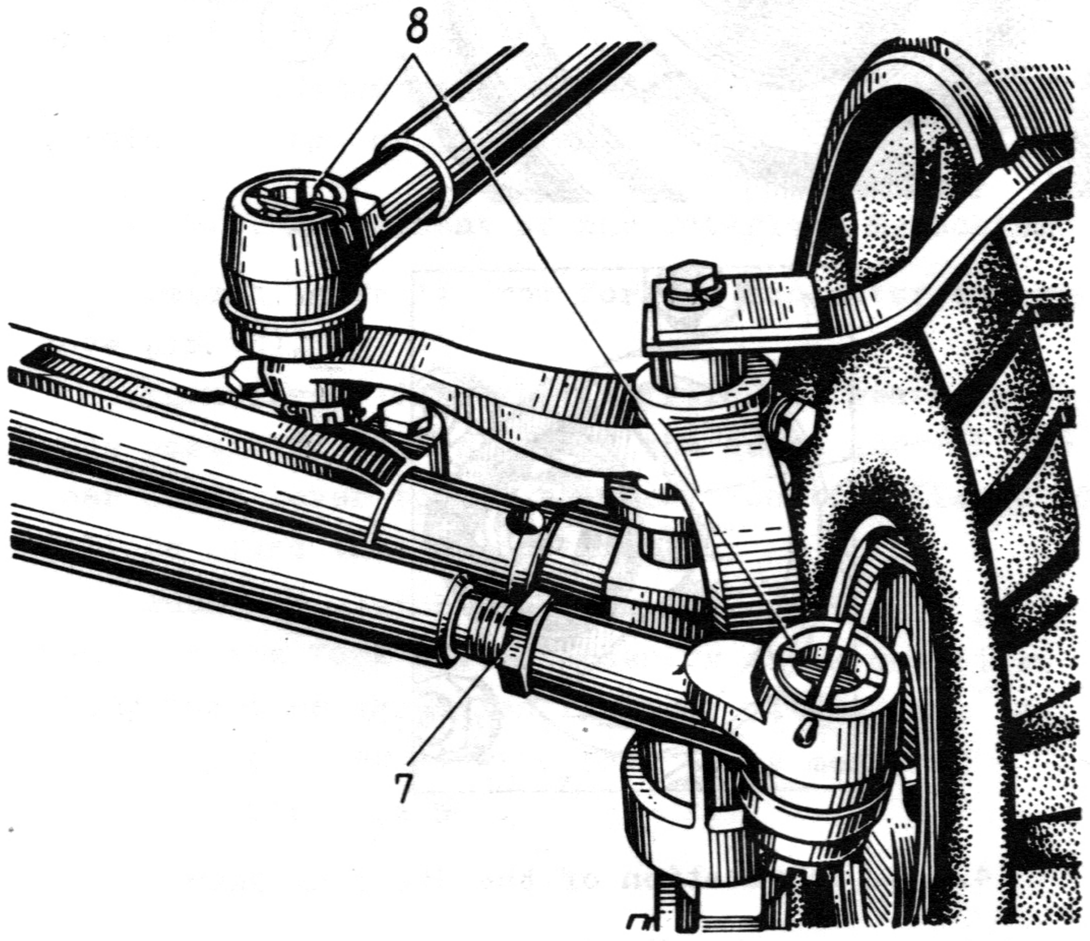

Place back the lock washer and tighten the nut home.

Preliminarily, in case of axial play in the steering wheel axle tapered bearings, eliminate the play by unscrewing bolts 5 and removing shims 6.

14.7.2. Front Wheel Toe-In Adjustment

Position the steerable wheels strictly in parallel with the tractor longitudinal axis.

With the tie-rod correctly adjusted, the distance between the flanges of the front wheel hubs, measured at the hub height in the front, should be 1-3 mm less than this distance behind the axle beam. If measured tire-to-tire, distance "A" must be 4-11 mm shorter than distance "B".

The adjustment is made by changing the length of the steering tie-rod. For this purpose, unlock nuts 7 and 9, turn tie-rod 10 to change its length as required, and lock the nuts.

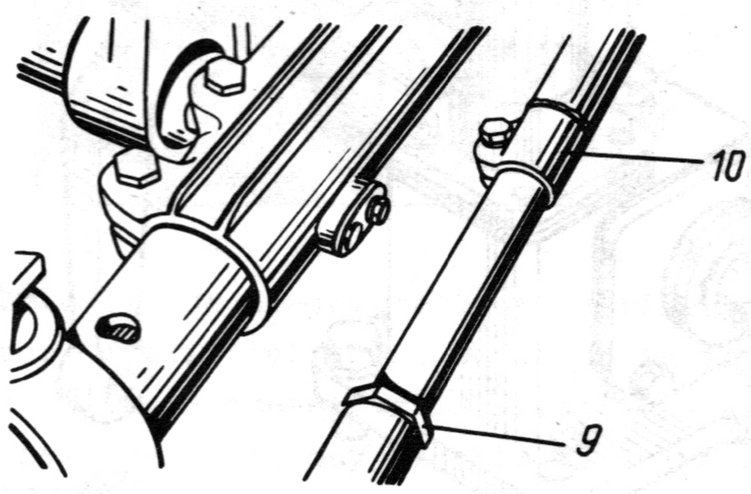

14.7.3. Front Wheel Bearing Clearance Adjustment

Place a jack under the front axle beam and raise the front wheel clear of the ground.

Move the wheel axially to detect the play. In case of notable play, adjustment is necessary.

Unscrew bolts 11 and remove cap 12.

Uncotter nut 13.

Tighten the nut until the wheel starts to rotate with difficulty when turned by hand, then back off the nut (1/6-1/4 turn) until the wheel rotates freely. Align the nut slot with the axle shaft hole and cotter the nut.

Install the cap back in place.

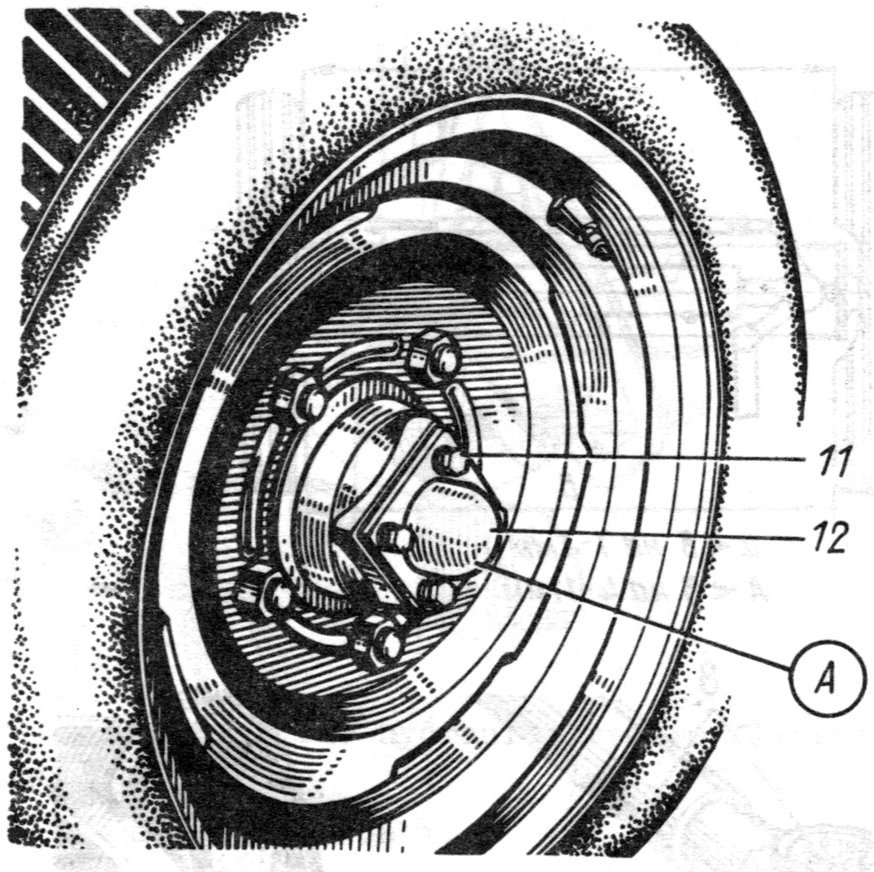

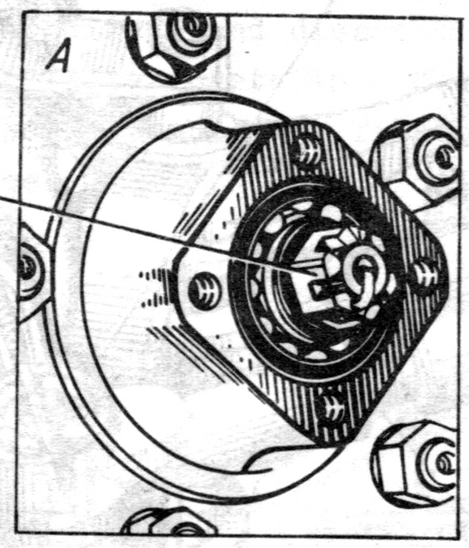

14.7.4. Lubrication of the Steering Gear

Check the steering gear for level of oil and top up, if required, through filling hole 4.

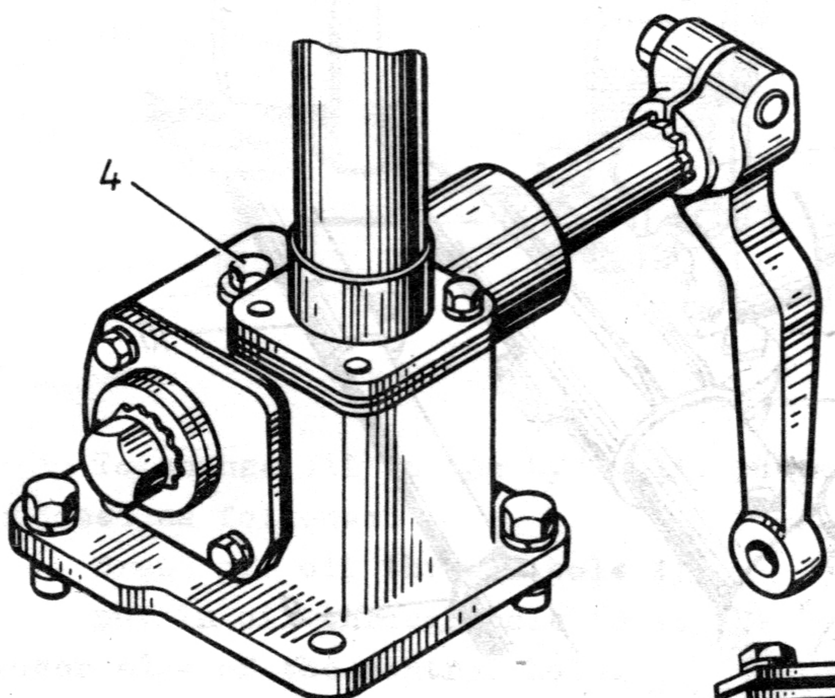

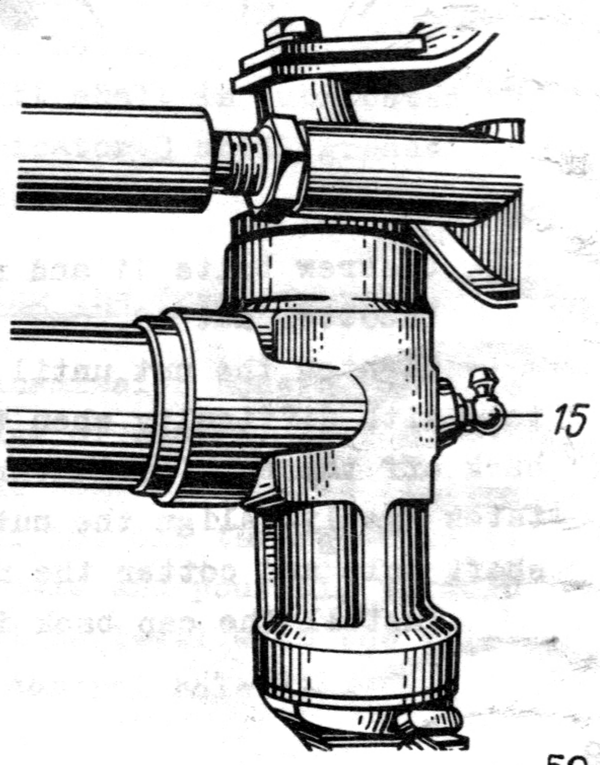

Lubricate the upper bearing through lubricator 14 (5-6 strokes of a grease gun).

Lubricate the king pins through lubricator 15 until grease shows up in the clearances.

Fill front wheel caps 12 with grease to lubricate the hubs.

14.8. Adjustment of the Fan Belt Tension

Adjust the belt for tension as follows. Loosen attachments 1 and 2, displace the alternator away from the engine as required and tighten the bolts. The adjustment is correct when the belt deflection under a force of 40 N (4 kgf) is 13-20 mm.

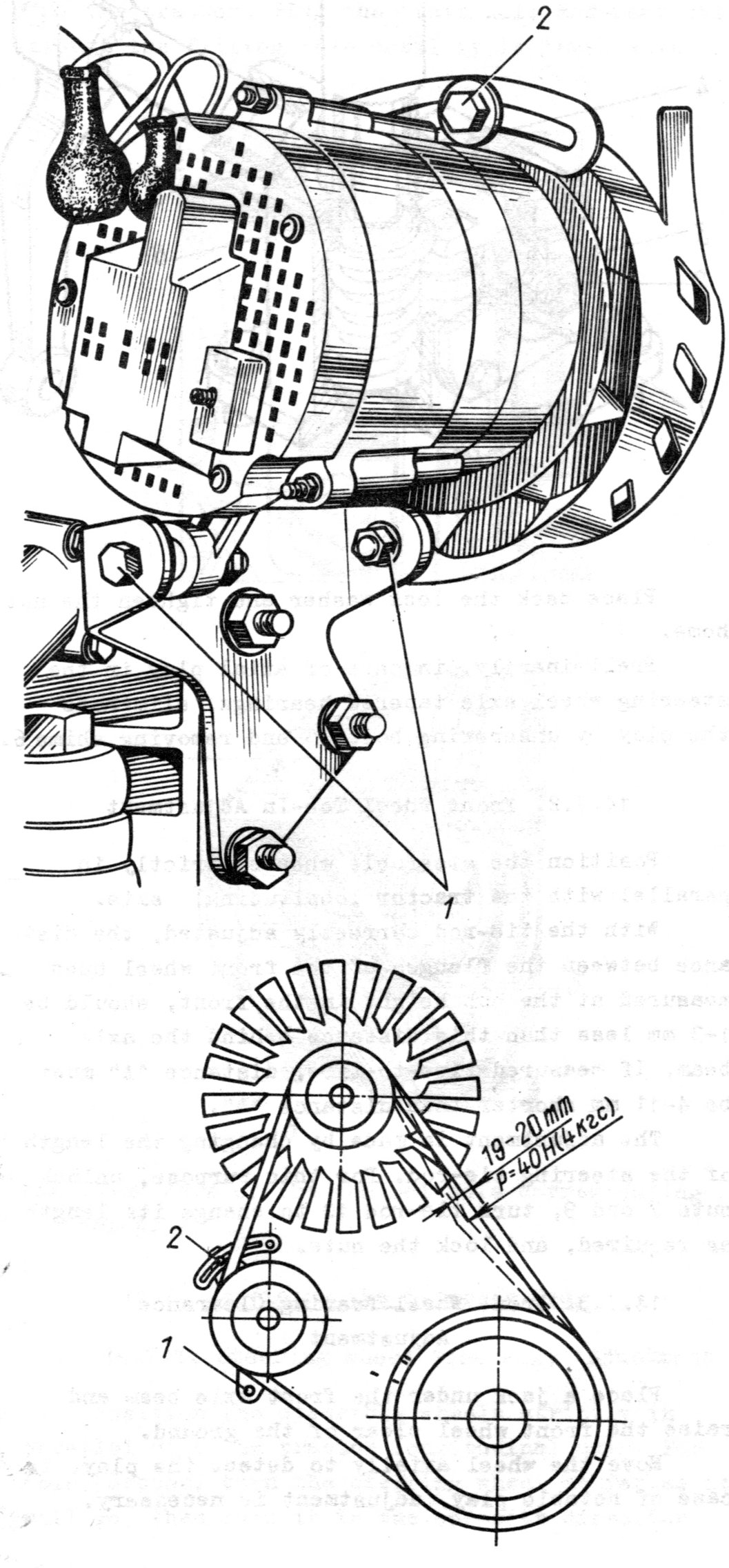

14.9. Adjustment of the Clutch and Interlock Mechanism

14.9.1. Adjustment of the Clutch

Set the gear shift lever in neutral.
Unscrew bolts 1 and remove cover 2.

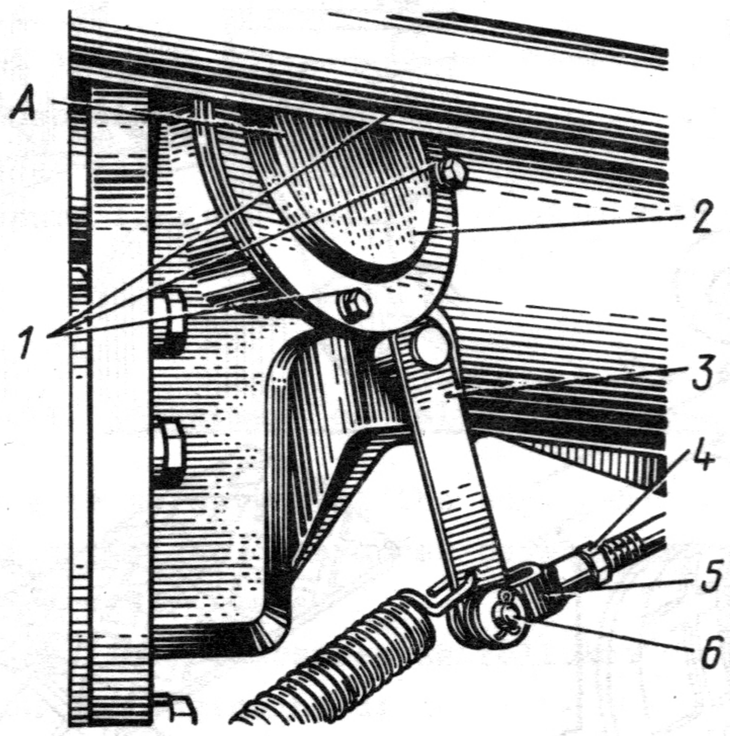

Turn the crankshaft with a wrench to set one of the three levers opposite to the handhole (do not turn the crankshaft by applying force to the pressure plate springs as this may disable the clutch).

Using a feeler gauge, check the clearance between the lever and bearing, which is to be in a range of 2-3 mm.

If necessary, adjust the clearance. For this purpose, loosen check nut 7, rotate adjusting bolt 8 to adjust the clearance, and lock it with check nut 7.

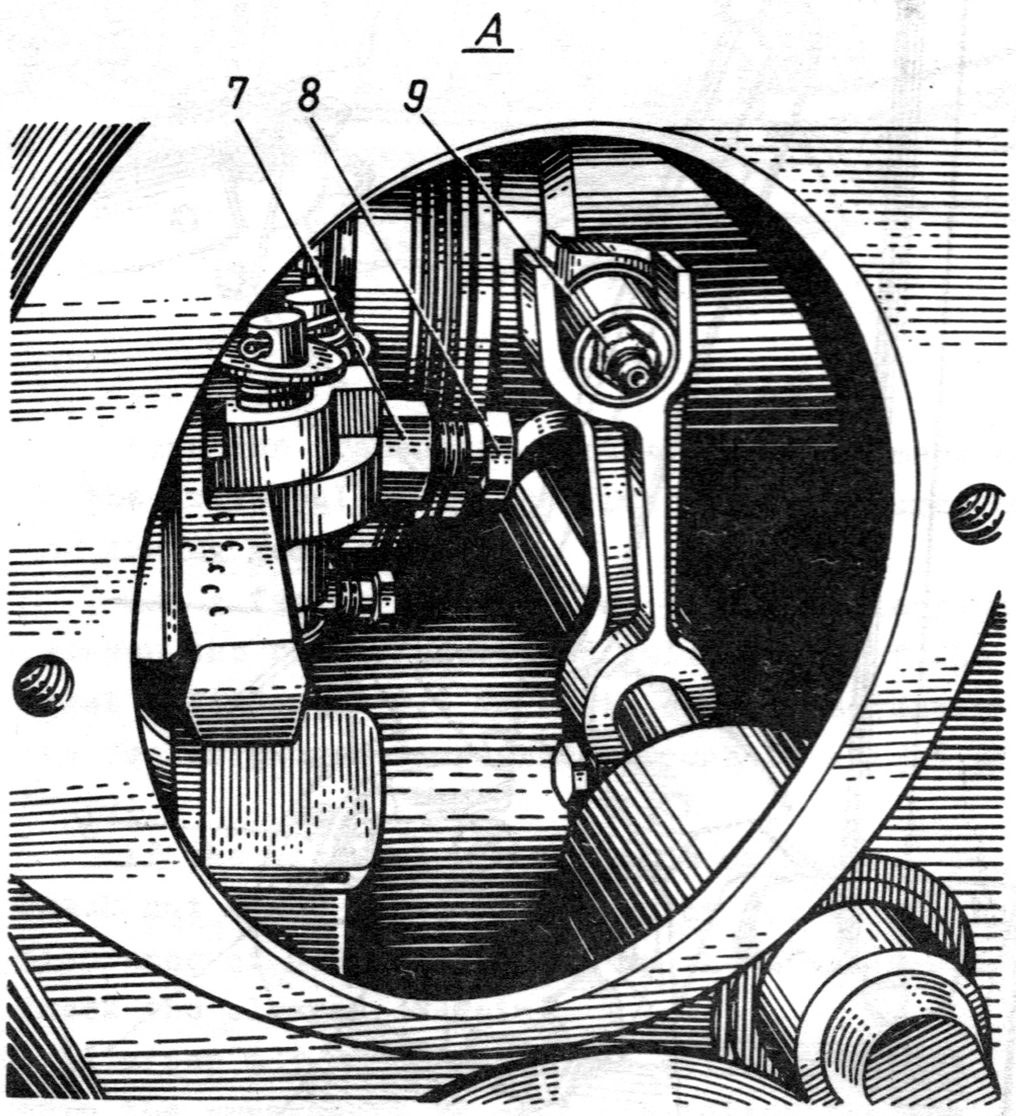

While rotating the crankshaft through 120° adjust the clearance between the next two levers and bearing (the clearances must not differ by more than 0.1 mm.

Loosen check nut 4 and turn the fork to position it so that the holes in the fork and shaft lever are in register.

Use pin 6 to couple the shaft with the fork and install cover 2 back in place.

If the clearances between the release levers and bearing are the same, the clearance may be adjusted by changing the length of the tie-rod. For this purpose, loosen check nut 4 and screw fork 5 on or out.

Upon adjustment, the pedal free play must be within a range of 30-50 mm.

14.9.2. Adjustment of the Interlock Mechanism

Detach lever 14 from fork 12 (uncotter and remove pin 13).

Turn lever 10 so that shifting of gears is made possible, engage one of the gears and set the gear shift lever to the half-way position (lever 10 will be fixed in this position).

Push the clutch pedal as far as it will go and turn the fork after loosening check nut 11 to bring together the holes in lever 14 and fork 12.

Couple lever 14 with fork 12 by means of pin 13. Cotter the pin.

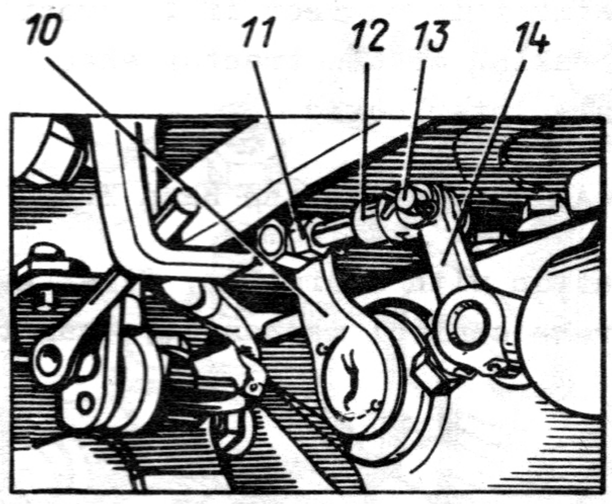

Lubricate the clutch release bearing through lubricator 9 until lubricant shows up in the clearances. Avoid excessive lubrication - grease on the pressure plate may disable the clutch.

14.10. Adjustment of the Brakes

14.10.1. Adjustment of the Foot Brakes

Undo the check nuts of bolts 1, 6, 7. Turn the bolts (starting from bolt 7) all the way in; the difference between dimensions "a" of bolts 1 and 6 must not exceed 1 mm.

Back off bolts 6 and 7 for 0.75-1 turn.

Secure bolts 6 and 7 with check nuts.

Loosen bolt 1 so that the difference between dimensions "a" of the front and rear bolt is 4^{+3}_{-2} mm. Secure the bolt in this position with a check nut.

Remove cover 4, loosen check nut 5 and screw down spherical nut 3 until it touches the taper surface of lever 2. Tighten up the check nut.

Check to see that the pedal free play is 25-60 mm and install the brake cover.

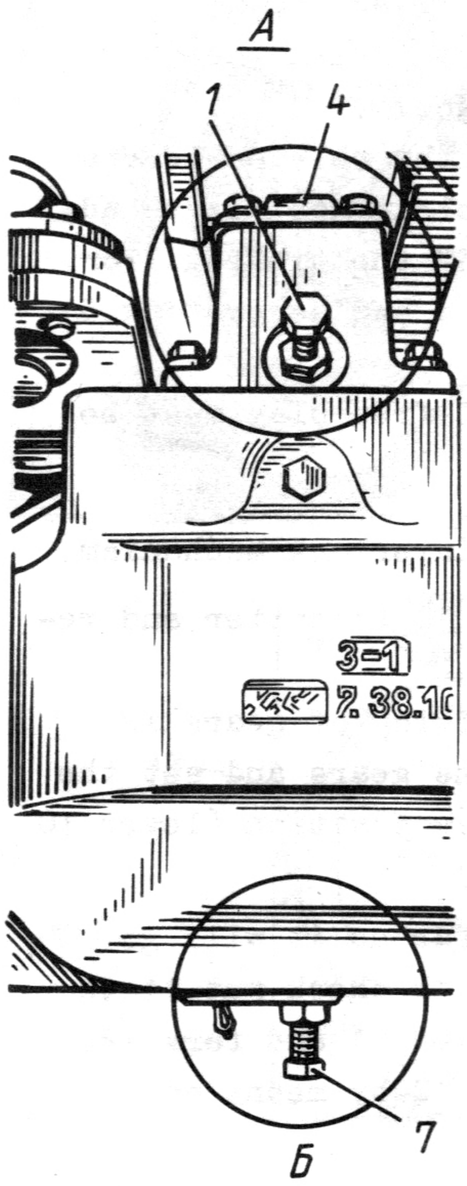

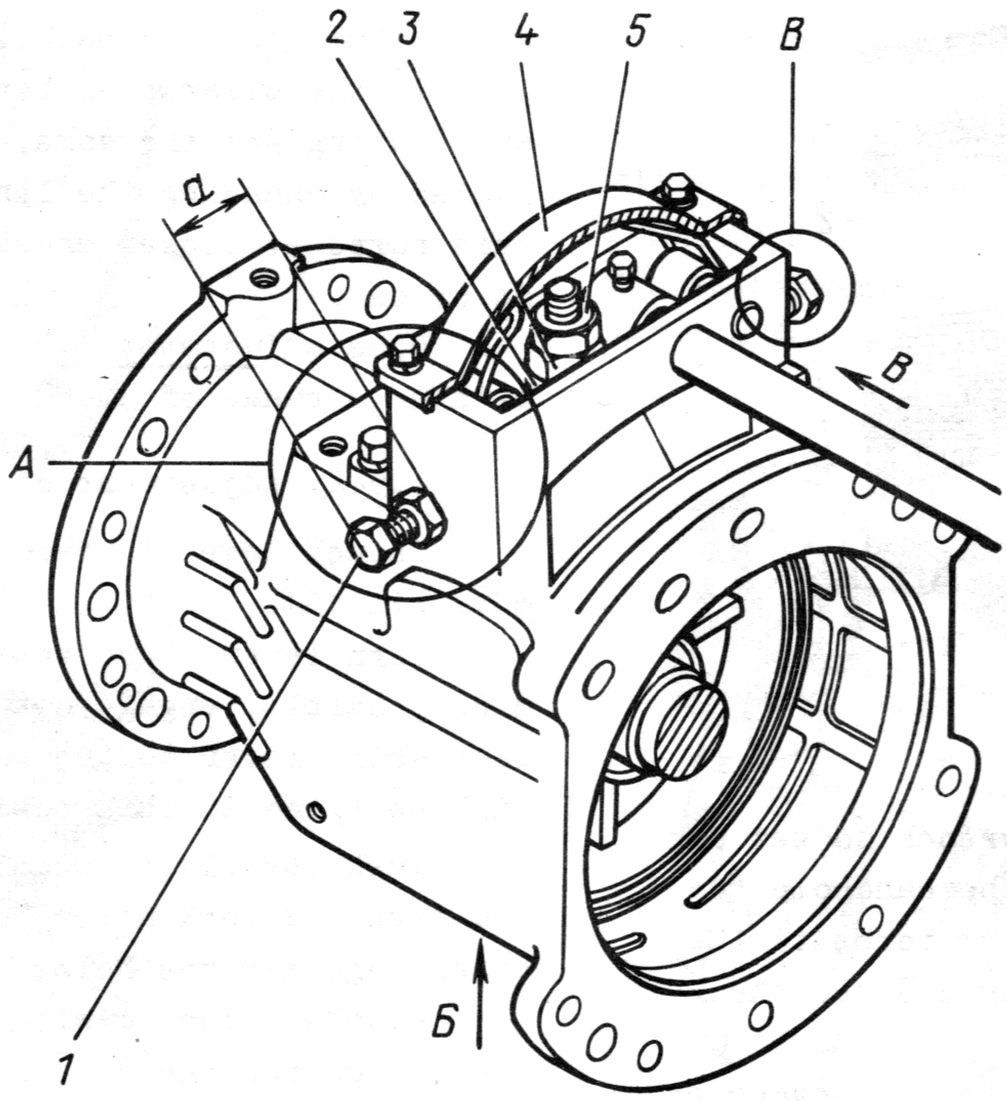

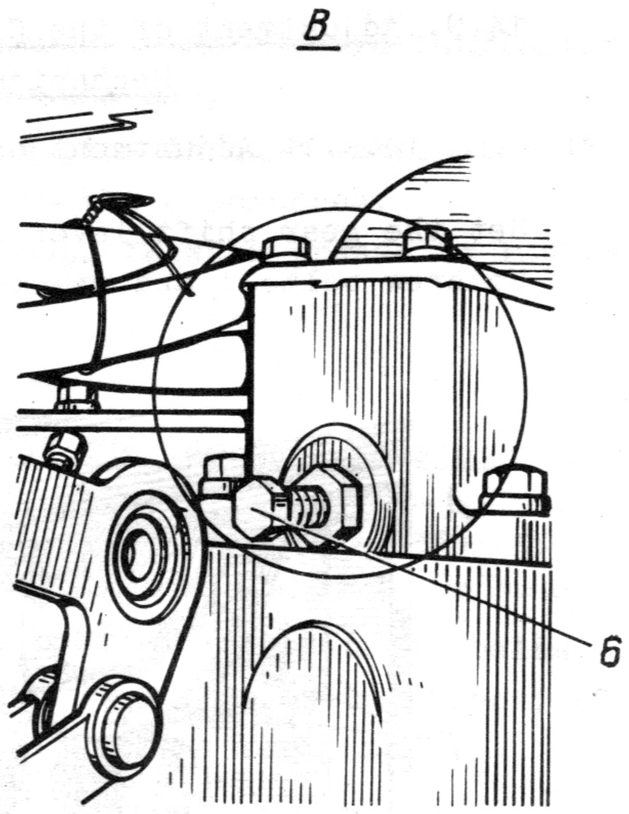

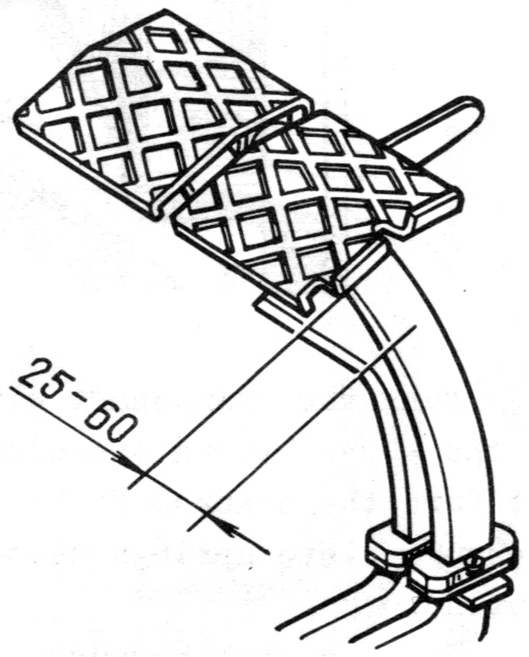

The adjustment is correct if it provides for simultaneous braking of the tractor wheels with the brake pedals interlocked.

14.10.2. Adjustment of the Hand Brake

For operation with a trailer, first adjust the trailer brake control mechanism, than that of the tractor,

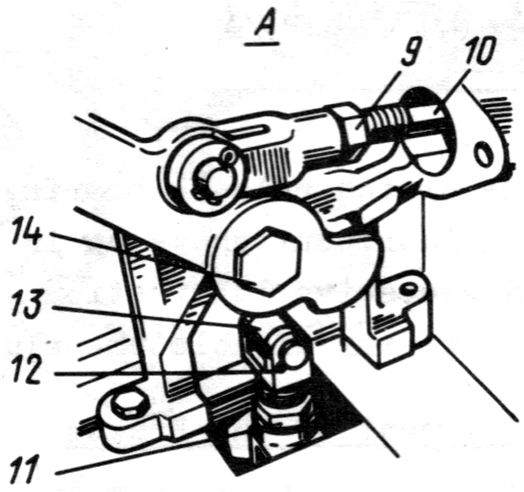

Adjust the hand brake as follows:

unbrake the tractor and interlock the brake pedals in this position;

set lever 8 in the extreme forward position;

loosen nut 9 and manipulate rod 10 to adjust the mechanism so that the travel of lever 8 insures full braking of the trailer;

secure the rod in this position with nut 9;

loosen nut 11 and use fork 12 to adjust the mechanism so that braking of the tractor is delayed relative to braking of the trailer;

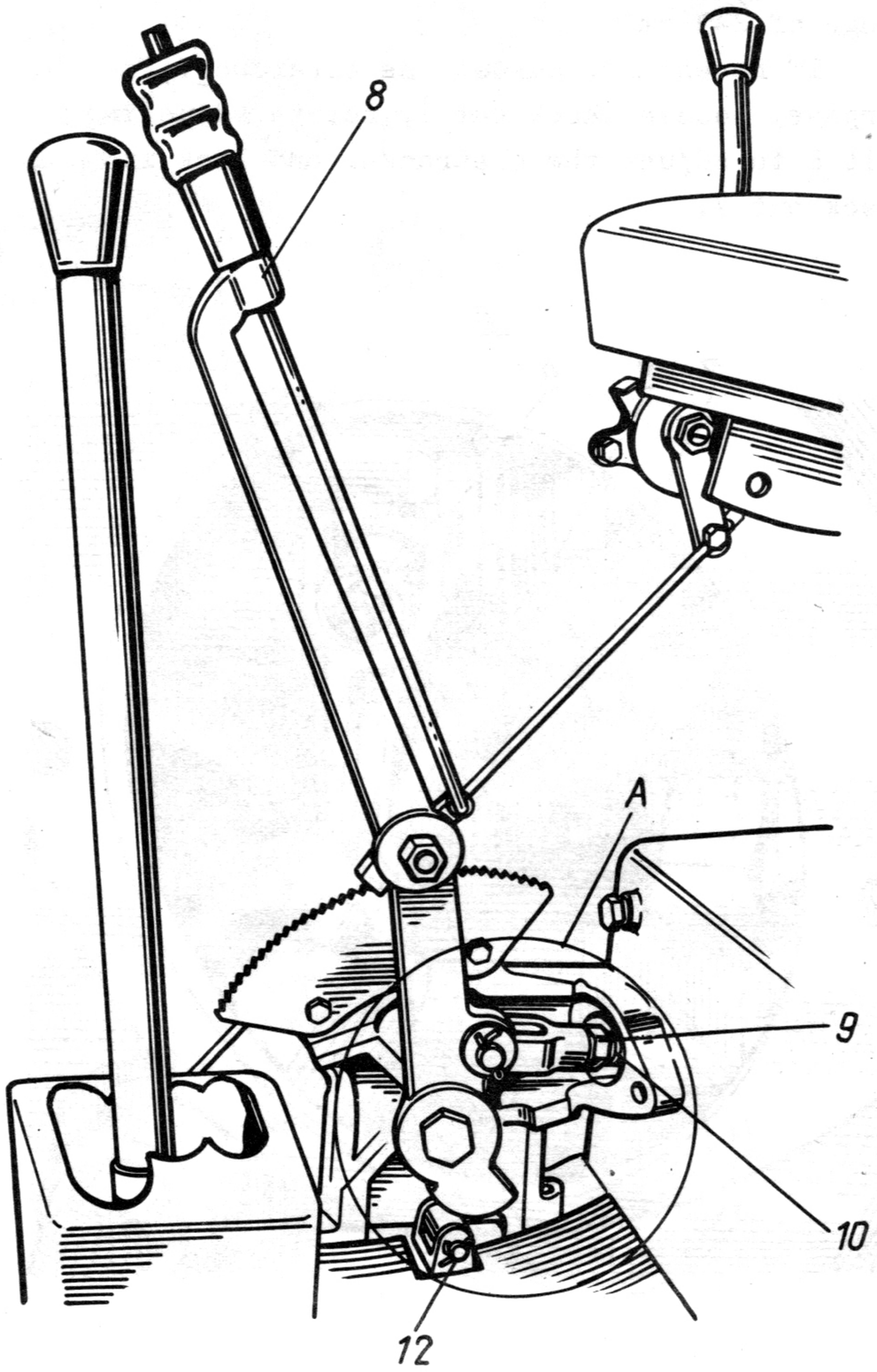

position the fork so that the longitudinal axis of roller 13 is in parallel to axle 14 of the hand brake lever and secure fork 12 in this position with a nut.

For trailerless operation, adjust the brake control mechanism as follows:

interlock the pedals and let them remain in the unbraked position;

set lever 8 in the extreme forward position;

loosen nut 11 and turn fork 12 to bring it in contact with the lever;

secure fork 12 in this position with nut 11.

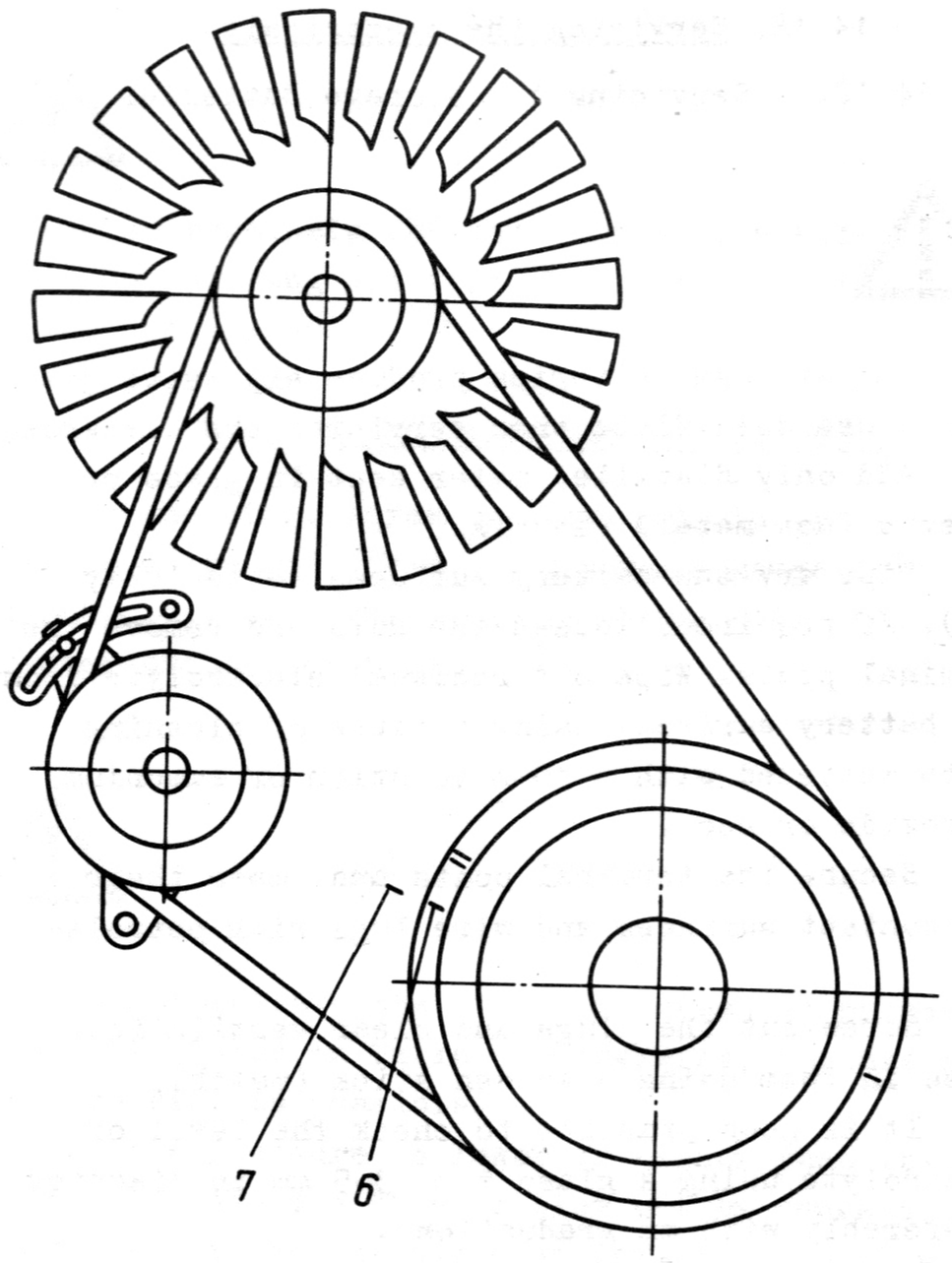

14.11. Adjustment of Valve Clearances

Be sure to wait till the engine is cold before adjusting the clearances between the valve stems and rocker heels.

Adjust the clearances as follows:

open the engine hood;

undo nuts 2 and remove valve covers 1;

use a wrench to turn the crankshaft (by the fan drive pulley attaching bolt) in the direction of engine run till suction valve 3 of the first cylinder (second in front) is closed (raised);

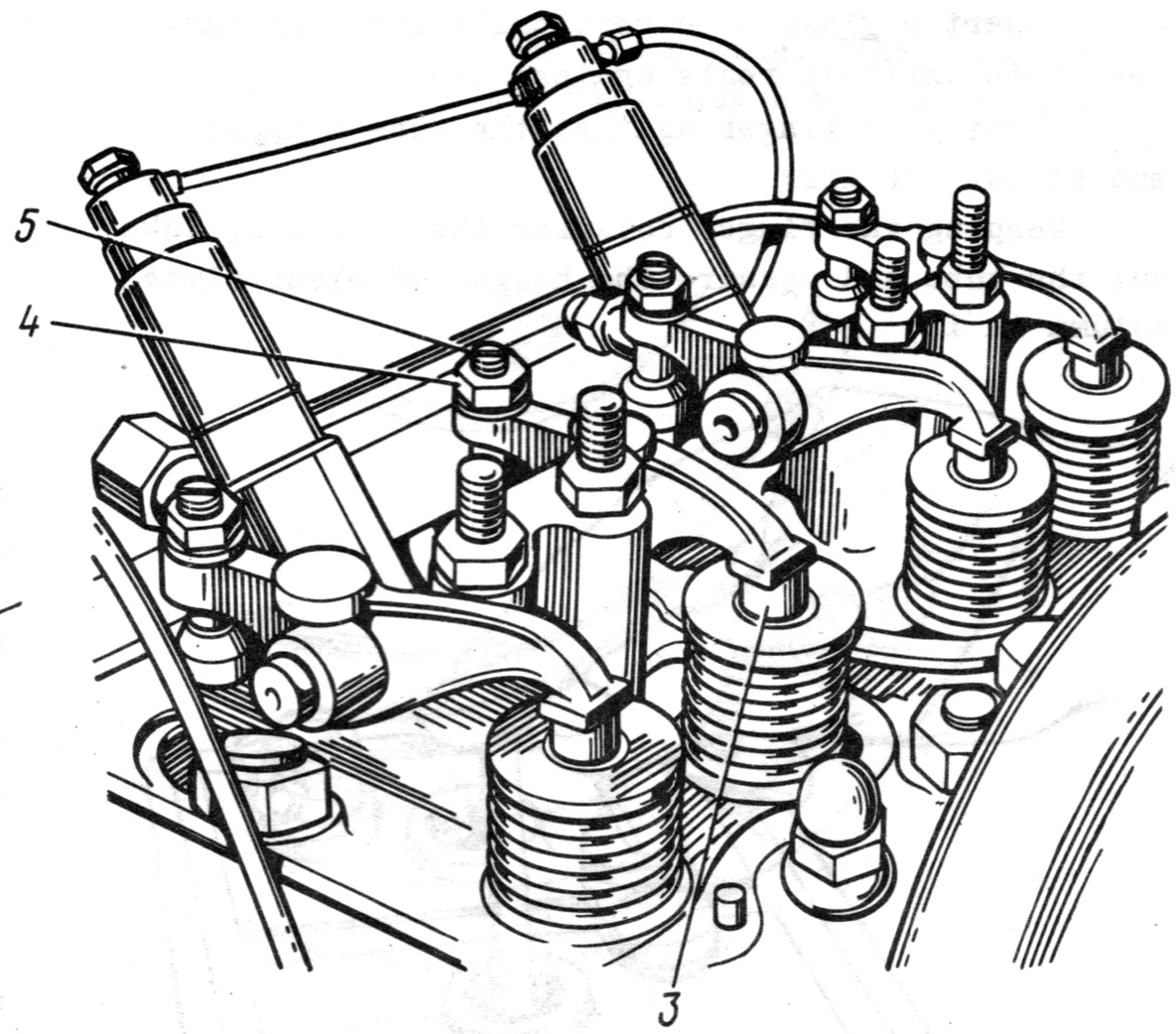

turn the crankshaft further to match mark 6 on the drive pulley to the TDC pointer secured on the timing gear cover;

use a feeler gauge to see that the clearance between the rocker heels and valve stems of the first cylinder is 0.3 mm (with correct adjustment, the feeler gauges is pushed through by slight effort);

if the clearance is too wide or narrow, loosen check nut 4 and turn screw 5 in or out to set the clearance of 0.3 mm. Tighten up the check nut and check the clearance again;

after adjusting the first cylinder valves, turn the crankshaft ½ of a revolution (in the engine run direction) and adjust the second cylinder valves;

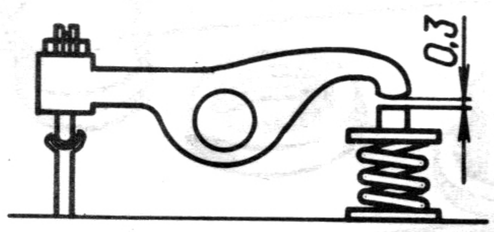

install the valve covers.

14.12. Servicing the Electricals

14.12.1. Servicing the Storage Batteries



The storage batteries produce explosive gas. Do not use open flame when servicing the batteries.

Add only distilled water kept in glass or plastic (not metal) vessels.

Wipe dry the battery surfaces (especially top). If required, loosen the nuts and remove the terminal posts. Wipe off residual electrolyte from the battery surfaces using a piece of cleaning cloth wettened with a 10-% solution of ammonium hydroxide or soda.

Secure the terminal posts and smear their non-contact surfaces and wire lugs with petrolatum.

Screw out the plugs and clear ventilation holes in them using a wooden stick (match),

It is good practice to check the level of electrolyte using a glass tube 3-5 mm in diameter (preferably with mm graduation).

For this purpose:

insert a glass tube vertically into the battery hole until it rests against the stop;

press your finger against the tube's upper end to cut off air;

keeping the finger covering the tube end, take out the tube and measure the height of electrolyte column in it;

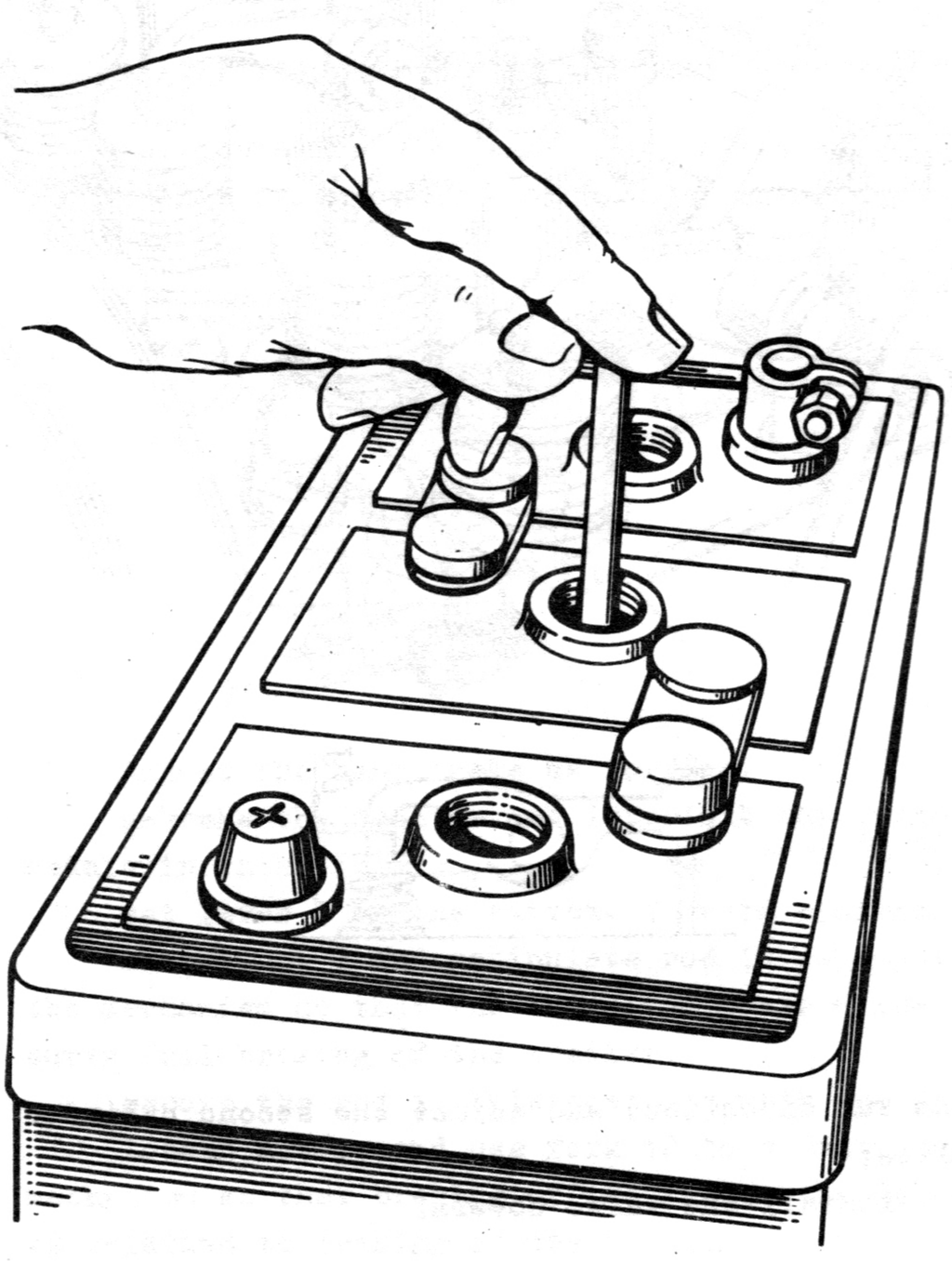

let air in the tube to discharge the electrolyte into the battery.

The electrolyte column height is indicative of the level of electrolyte in the battery which must be 10-15 mm.

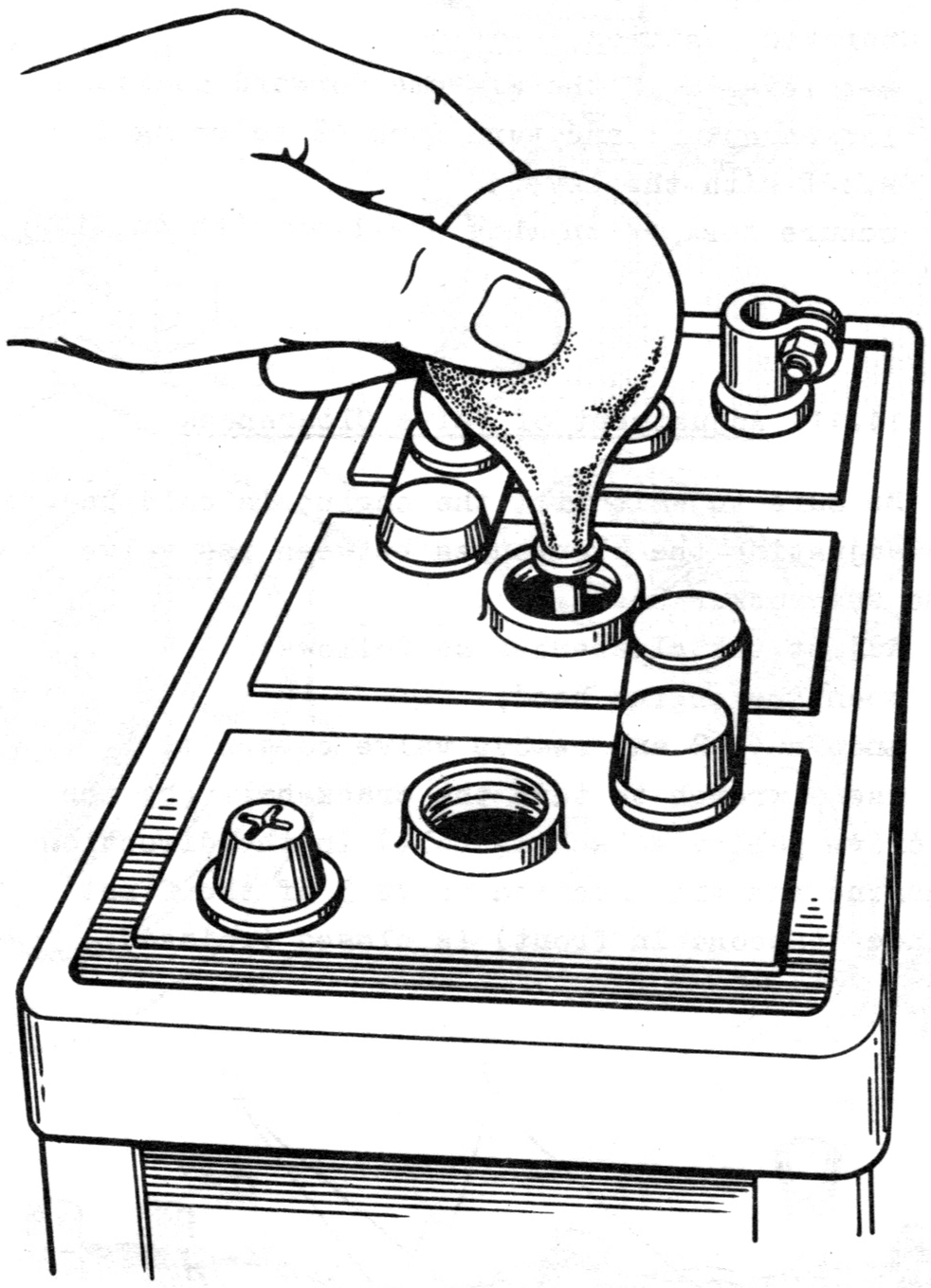

Top off the level by pouring distilled water from a convenient glass or using a rubber hand pump. Plug the battery upon topping off.

Add electrolyte only in cases when you are sure that the level is low owing to splashing out or leakage. In such cases electrolyte to be added and that in the battery must be of the same specific gravity. In all other cases, top off the level using distilled water.

Never use the battery with plates partly naked. Too low level of electrolyte results in sulphation of the naked part of plates and drop in the battery capacity.

Check the specific gravity of electrolyte with a hydrometer. Press and release the hydrometer rubber hand pump to suck in some electrolyte. Use Tables 2 and 3 to derive the state of charge values from hydrometer readings.

Use a cell tester to check the battery voltage. Set the load resistor in accordance with the battery capacity and check the state of charge of its cells (see Table 4). The voltage must be steady - at least 1.8 V in winter and 1.7 V in summer. The cells must not differ in voltage by more than 0.2 V.

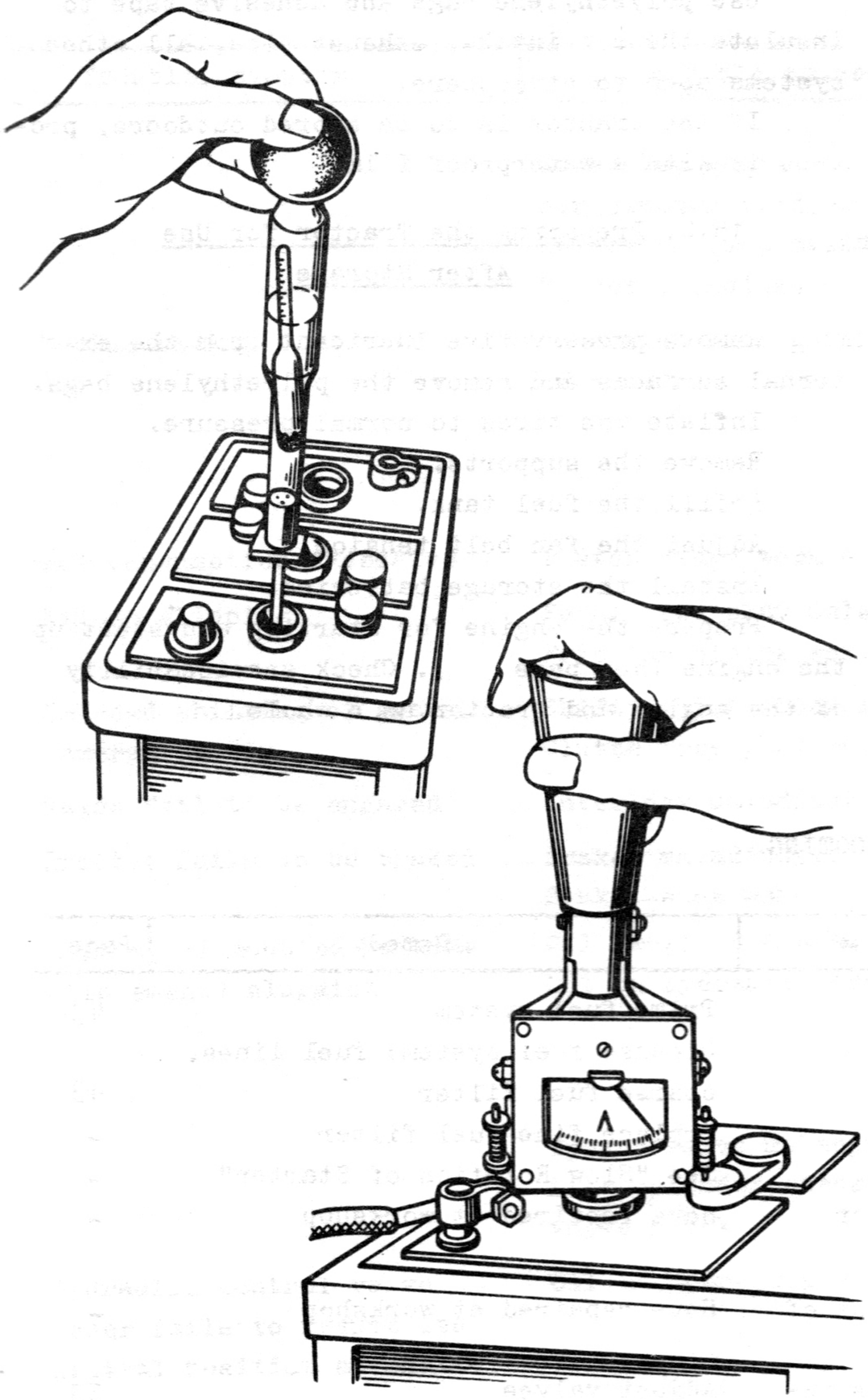

14.12.2. Servicing the Alternator

Check the alternator voltage at rated engine rpm and with the battery switched on. For checking, connect a voltmeter to terminal "+" and tractor ground. The readings must be 13.2-14.1 V with the switch in the "Л" (summer) position and 14.3-15.2 V in the "З" (winter) position.

If the voltage is lower, the alternator needs repair at a repair shop.

Loose terminals and poor wiring contacts may result in sparking and fire. See that all wires are well-insulated.

14.13. Checking the Tires for Air Pressure

For checking, screw out the cap, insert a pressure gauge and press the pressure gauge tube against the valve. The pressure gauge will read air pressure in the tire.

Do not inflate the tires in excess of pressure values tabulated in Table 5. Otherwise, rapture of the tire side is possible.

If the pressure is lower or higher than required, inflate the tire or blow off by depressing the valve. Cap the nipple upon inflating or blowing off.

Do not fail to cap the nipple. Otherwise, ingress of mud under the valve may hamper servicing of the tire.

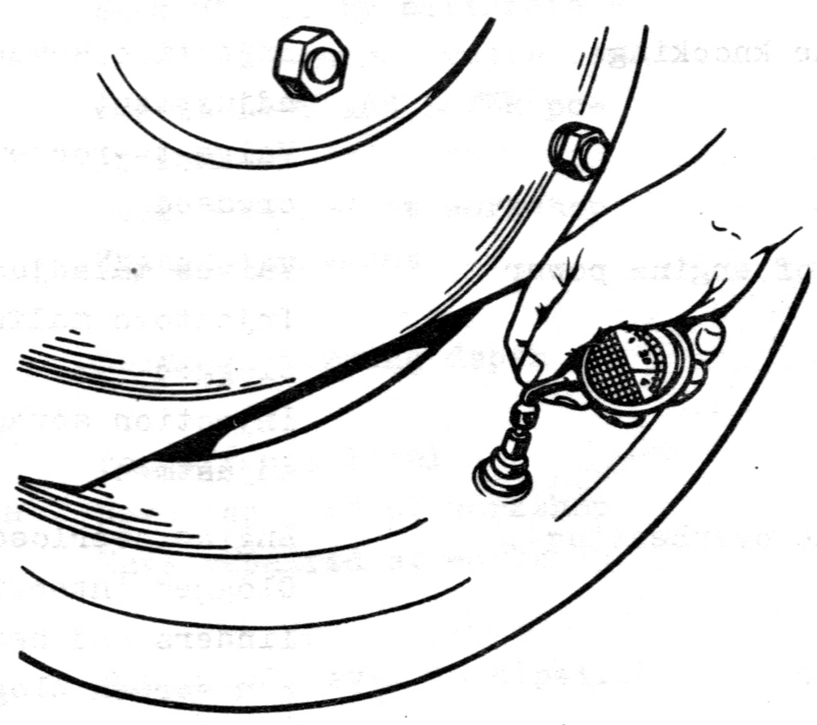

15. STORAGE

15.1. Preparation for Storage

Prepare the tractor for storage if it is not to be used for a period of time longer than one month. Proper preparation of the tractor prevents corrosion and, therefore, helps prolong the tractor's service life.

Drain off fuel and fill the fuel tank with 4 l of fuel mixed with 5 % of corrosion retarding additive AKOP-1.

Apply cup grease to all lubrication points (see pages 38, 41).

Drain the crankcase, injection pump, air cleaner sump.

Refill them with oil mixed with conservative additive.

Start up the engine, let it run for 5-8 minutes to gain a working temperature, shut down the engine.

Relieve the fan belt of tension.

Remove the storage batteries and store them charged in a dry cool place.

Clean the tractor, restore paint where damaged.

Apply a coat of rust-preventive compound ЗВВД-13 and ИВВС on all bare metal surfaces (threaded surfaces of mounted equipment, hydraulic cylinder rods, wire lugs, pulley grooves, etc.).

Put the tractor on supports so that its wheels are clear of the ground, protect them from heat and sun.

Deflate the tires to 70 % of normal pressure.

Use polyethylene bags and adhesive tape to insulate the air intake, exhaust pipe, all other systems open to atmosphere.

If the tractor is to be stored outdoors, protect it with a waterproof film.

15.2. Preparing the Tractor for Use After Storage

Remove preservative lubricant from the external surfaces and remove the polyethylene bags.

Inflate the tires to normal pressure.

Remove the supports.

Refill the fuel tank.

Adjust the fan belt tension.

Install the storage batteries.

Prepare the engine for starting and start up the engine (see page). Check serviceability of the engine and tractor as a whole.

16. TROUBLE SHOOTING

Trouble, symptom	Probable cause	Remedy	Page
Engine fails to start or runs irregularly	Air in fuel system	Prime fuel system	43
	Fuel lines clogged	Cleanse fuel system: fuel lines, coarse fuel filter	43
		Replace fine fuel filter	-
	Starter rotation slow	See "Slow Rotation of Starter"	-
	Injectors malfunctioning or clogged	Have repaired at workshop	-
Engine knocking	Injection advance angle out of adjustment	Have repaired at workshop	-
	Valve-to-rocker clearances increased	Adjust valves	53
Loss of engine power	Valves maladjusted	Adjust valves	53
	Injectors malfunctioning or clogged	Have repaired at workshop	-
	Injection advance angle out of adjustment	Have repaired at workshop	-
Engine overheating	Engine overloaded	Reduce load	-
	Clogged interfin space of cylinders and heads	Clean and rinse interfin space	43
	Fan screen clogged	Clean screen	43
	Fan drive belt slipping	Tension belt	50
	Fan drive belt raptured	Replace belt. Adjust tension of new belt	59
Oil pressure low	Low level of oil in crankcase	Top up to "B" mark on dipstick	46
	Reducing valve maladjusted, other faults	Have repaired at workshop	-
Blue smoky exhaust	Wrong grade of fuel	Use proper grade	-
	Low engine temperature	Warm up engine	16
	Irregular engine running	Have repaired at workshop	-
Black smoky exhaust	Wrong grade of fuel	Use proper grade	-
	Engine overloaded	Reduce load	-
	Clogged or malfunctioning injectors	Have repaired at workshop	-

Continued

Trouble, symptom	Probable cause	Remedy	Page
	Irregular engine running	Have repaired at workshop	-
	Air cleaner clogged	Wash air cleaner	45
	Injection pump maladjusted	Have repaired at workshop	-
	Valves maladjusted	Adjust valves	53
Engine racing	Injection pump governor out of repair	Shut off fuel delivery, apply maximum load to stop engine, engage decompressor and brake tractor. Have repaired at workshop	-
Oil consumption excessive	Piston rings worn or stuck	Have repaired at workshop	-
Clutch slipping	Pedal free play maladjusted	Adjust pedal free play	51
	Friction plates worn	Have repaired at workshop	-
Impeded shifting of gears, reverse or PTO	Shifting interlock maladjusted	Adjust interlock	51
	Clutch free play maladjusted	Adjust clutch free play	51
Gears fail to be engaged	Interlock maladjusted	Adjust interlock	51
Tractor fails to be braked	Brakes maladjusted	Adjust brakes	51
	Brake bands worn	Have repaired at workshop	-
Lifting of mounted machine (implement) sluggish	Oil level in hydraulic tank	Top off oil level	47
	Oil in hydraulic system cold	Warm up oil by alternately shifting control valve lever to LIFT and LOWER positions	-
	Bypass valve maladjusted	Have repaired at workshop	-
	Lift cylinder stroke limiter valve stuck	Pull out valve with pliers	-
Hydraulic control valve lever fails to resume its neutral position automatically	Oil in hydraulic system cold	Warm up oil by alternately shifting control valve lever to LIFT and LOWER positions	-
	Safety valve maladjusted	Have repaired at workshop	-
	Hydraulic system overloaded: too heavy mounted implement	Change implement	-
	Hydraulic system overloaded: soil resistance excessive	Decrease working depth	-
Implement fails to be held in lifted position	Oil level in tank too low	Top off oil level	47
	Hydraulic cylinder sealing worn	Have repaired at workshop	-
	Hydraulic control valve out of repair	Have repaired at workshop	-
Oil ejected through tank bleather	Oil level too high or low	Bring oil level to dipstick upper mark	47
	Oil pump worn	Have repaired at workshop	-
Starter fails to crank engine, cranking too slow	Batteries down	Check battery state, have repaired at workshop if necessary	54
	Solenoid switch contacts burnt	Clean and smear contacts	54
	Wire lugs on battery terminal posts or starter oxidized or loose	Clean and tighten contacts	54
Gears noisy with starter switched on	Solenoid switch contact closing maladjusted	Adjust switch contact closing	60
	Starter solenoid switch contacts stuck	Immediately open battery switch, remedy fault	-

Continued

Trouble, symptom	Probable cause	Remedy	Page
Alternator fails to generate charging current	Wires broken, lug contact disturbed	Detect and remedy fault	-
	Fan belt loose or raptured	Tension or replace belt	50, 59
	Alternator out of order	Have repaired at workshop	-
Alternator fails to develop full power, batteries fail to get charged	Fan belt slipping	Adjust fan belt tension	50
	Alternator out of order	Have repaired at workshop	-
	Batteries out of order	Have repaired at workshop	-
Batteries systematically overcharged (ammeter continuously reads high charging current)	Alternator out of order	Have repaired at workshop	-
	Batteries out of order	Have repaired at workshop	-
With battery switch closed ammeter reads high charging current (engine stopped)	Batteries down	Avoid frequent starting up engine (especially cold) without recharging batteries	-
Lamps fail to light up	Short battery circuit	Have repaired at workshop	-
	Lamps burnt out	Replace lamps	-
	Fuse blown	Replace fuse	59

Note. Consult repair shop personnel when unable to detect a fault.

17. REMOVAL OF TROUBLES

As a rule, malfunctioning results from delayed or improper maintenance. Therefore, the methods of trouble shooting are, for most part, described in the Maintenance section.

Described below are methods of removal of some troubles bearing no relationship to maintenance.

17.1. Replacement of Fan Belt

Replace the fan belt as follows:

remove the screen;

loosen nuts which attach the alternator and tension strip;

turn the alternator towards the engine;

remove the worn belt and install a new one;

install the screen;

adjust the belt tension (see page 50).

17.2. Elimination of Hydraulic Cylinder Stroke Limiter Valve Stucking

Set the hydraulic control valve lever to the LIFT then NEUTRAL position. Use pliers to pull out the limiter valve.

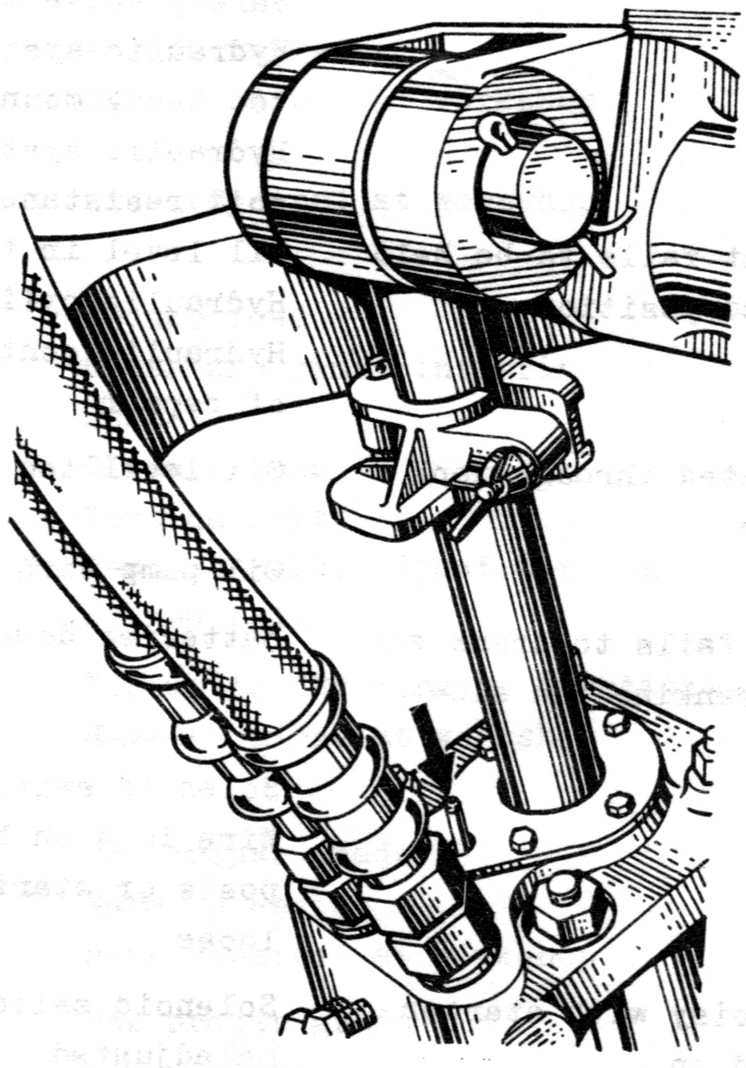

17.3. Elimination of Cell Jar Leakage

When servicing the storage batteries, see that the jar surfaces are not moist. If moisture is found, wipe the wet place dry using a piece of cleaning cloth and examine the jar for cracks. Repair a cracked jar at a workshop. Never allow the battery plates to be bare.

17.4. Replacement of Fuses

Use only standard fuses, never rely on a piece of wire.

Open the cover to replace a fuse.

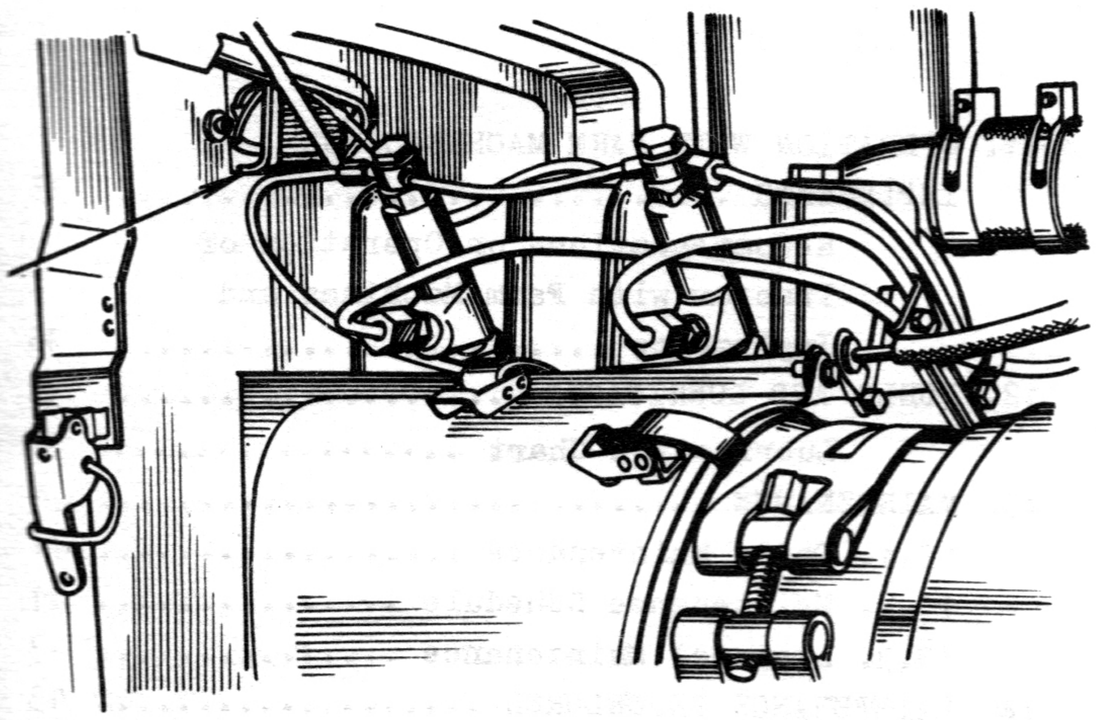

17.5. Adjustment of Starter Pinion Meshing

Adjust as follows:

remove the starter and apply voltage from the positive battery terminal to the solenoid switch terminal;

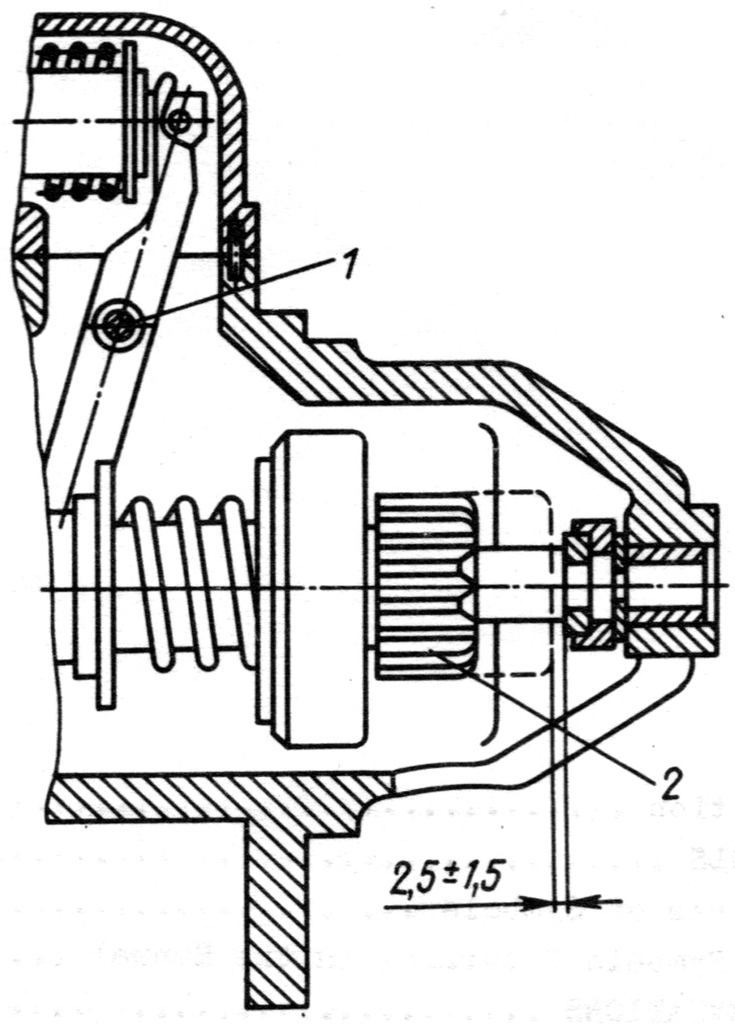

connect the starter frame to ground or battery negative terminal;

to prevent rotation of the armature, de-energize the solenoid switch contacts.

As the wire is connected to the solenoid switch, pinion 2 is pushed in mesh with the flywheel gear ring. In this position, the clearance between the pinion and semi-ring on the armature shaft should be 2.5±1.5 mm.

Adjustment of position of pinion 2 is made by turning eccentric axle 1. After the adjustment is over, lock the axle.

APPENDIX

List of Optional Equipment Available on Order

1. Drive pulley.
2. Additional ballast weights.
3. Sets of spares for rearrangement of the tractor to operate in reverse for:

T25A - A25 - 3932200A
T25A2 - A25 - 3932200A - 20
T25A3 - A25 - 3932200A - 10.

4. Automatic hitch.
5. Switching hitch.

CONTENTS

Introduction 3
1. SYMBOLS 3
1.1. Use of Symbols 3
1.2. Symbols Occurring in the Manual 3
2. ABBREVIATIONS 4
3. SAFETY PRECAUTIONS 5
4. DESCRIPTION AND SPECIFICATIONS 7
4.1. General Data 7
4.2. Tractor 8
4.3. Engine 9
4.4. Power Train 9
4.5. Running Gear 9
4.6. Hydraulic Lift System 10
4.7. Electricals 10
5. CONTROLS AND INSTRUMENTS 10
5.1. Controls 10
5.2. Switches and Instruments 12
5.3. Operator's Workplace 14
6. BREAKING IN 16
7. OPERATION 17
7.1. Starting and Shutting Down the Engine 17
7.2. Driving the Tractor 17
8. OPERATING AND AUXILIARY EQUIPMENT 18
8.1. Mounted Equipment 18
8.2. Drawbar 20
8.3. Swinging Hitch 20
8.4. Hydraulic Hook 21
8.5. Brake Master Cylinder 22
8.6. PTO shaft 23
8.7. Drive Pulley 24
8.8. Tractor Rearrangement for Operation in Reverse Gear 24
9. RUNNING GEAR 27
9.1. Wheels and Tires 27
9.2. Tractor Setup Rearrangement 29
9.3. Adjusting Tractor Wheel Track 30
10. ELECTRICALS 32
10.1. Schematic Circuit Diagram 33
10.2. Alternator 34
10.3. Storage Batteries 34
10.4. Head Lamp Aiming 35
11. OPERATION WITH FARM MACHINES AND IMPLEMENTS 35
Recommendations on Operation of Tractor with Farm Machines and Implements 36
12. FUELS AND LUBRICANTS 38
Lubrication Chart 39
13. MAINTENANCE 41
13.1. Daily Maintenance 41
13.2. Maintenance Schedule 41
13.3. Seasonal Maintenance 43
14. MAINTENANCE PROCEDURES 43
14.1. Cleaning and Washing the Tractor ... 43
14.2. Servicing the Fuel System 43
14.3. Servicing the Air Cleaner 45
14.4. Servicing the Lubrication System ... 46
14.5. Servicing the Hydraulic System 47
14.6. Servicing the Transmission 48
14.7. Servicing the Steering Gear 48
14.8. Adjustment of the Fan Belt Tension . 50
14.9. Adjustment of the Clutch and Interlock Mechanism 51
14.10. Adjustment of the Brakes 51
14.11. Adjustment of Valve Clearances 53
14.12. Servicing the Electricals 54
14.13. Checking the Tires for Air Pressure 55
15. STORAGE 55
15.1. Preparation for Storage 55
15.2. Preparing the Tractor for Use after Storage 56
16. TROUBLE SHOOTING 56
17. REMOVAL OF TROUBLES 58
17.1. Replacement of Fan Belt 58
17.2. Elimination of Hydraulic Cylinder Stroke Limiter Valve Stucking 58
17.3. Elimination of Cell Jar Leakage 59
17.4. Replacement of Fuses 59
17.5. Adjustment of Starter Pinion Meshing 59
APPENDIX. List of Optional Equipment Available on Order 59

Внешторгиздат. Изд.№ 3277А
Тракторы Т25А, Т25А2, Т25А3.
Инструкция по эксплуатации для
оператора на англ. яз.
ВТИ. Зак. 6669

ДОПОЛНЕНИЕ
к "Инструкции по эксплуатации тракторов Т25А, Т25А2, Т25А3" для оператора

На тракторе установлен щиток приборов новой конструкции с удобным обзором контрольных приборов и дополнительной информацией, а также изменена схема электрооборудования.

Общий вид щитка приборов, размещения на нем органов включения приборов электрооборудования и контрольных приборов показано на рис. 1, 2.

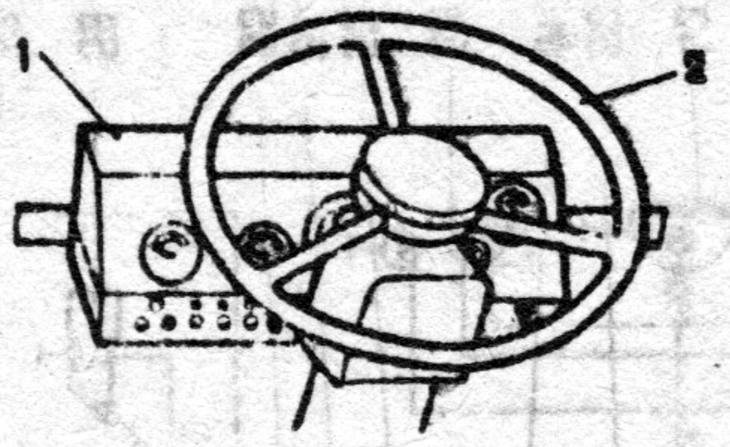

Рис. 1. Схема установки щитка приборов

1 - щиток приборов,
2 - колесо рулевое

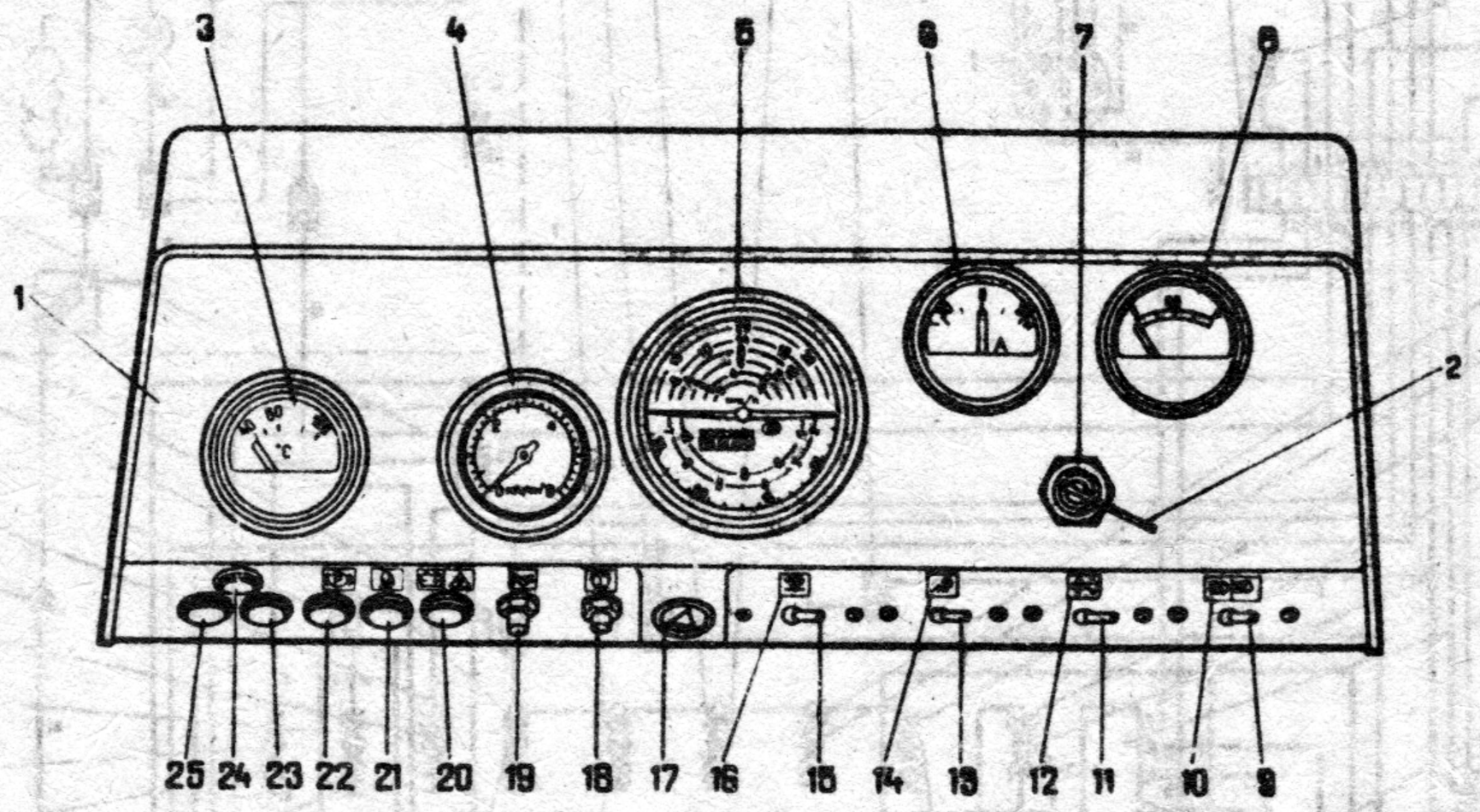

Рис. 2. Органы включения приборов электрооборудования и контрольные приборы:

1-щиток приборов; 2-ключ замка-включателя; 3-приемник указателя температуры масла; 4-манометр давления масла; 5-тахоспидометр со счетчиком моточасов; 6-указатель тока (амперметр); 7-замок-включатель, 8-приемник указателя уровня топлива; 9-переключатель дальнего и ближнего света; 10, 12, 14, 16-символические знаки; 11-переключатель указателей поворотов; 13-включатель задних фар; 15-включатель освещения щитка приборов, габаритных огней и фар; 17-включатель аварийной сигнализации; 18-кнопка включения электродвигателя омывателя ветрового стекла; 19-кнопка звукового сигнала; 20 фонарь контрольной лампы обрыва ремня вентилятора и включателя "массы"; 21-фонарь контрольной лампы свечи накаливания; 22-фонарь контрольной лампы стояночного тормоза; 23-фонарь контрольной лампы указателей поворота прицепа; 24-фонарь контрольной лампы указателей поворота прицепа; 25-фонарь контрольной лампы дальнего и ближнего света.

Примечание: позиции 17 и 24, а также дополнительно манометр давления воздуха, устанавливаются на щитке приборов по согласованию с потребителем.

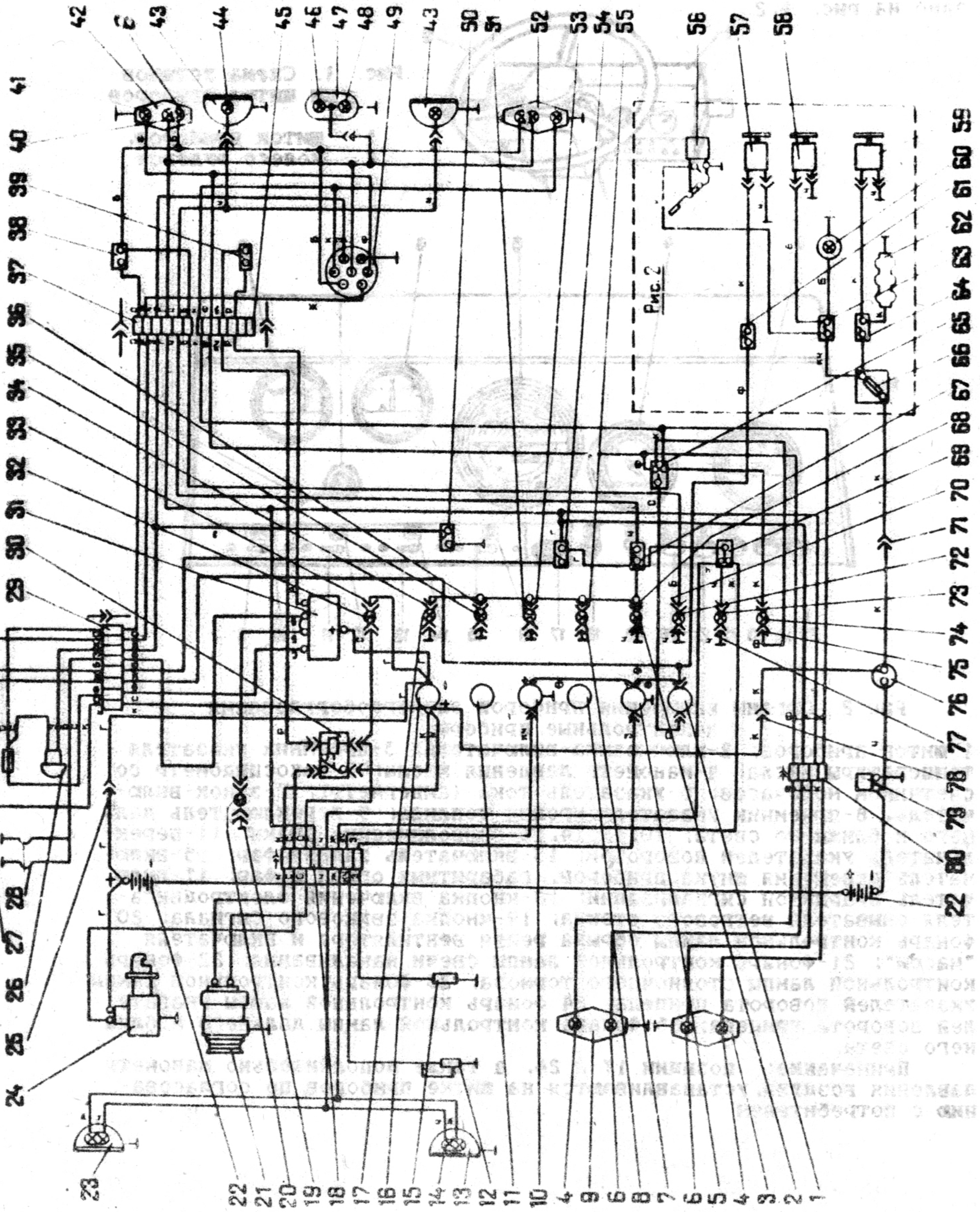
Рис.2

Рис. 3. Схема электрооборудования трактора

1-прерыватели указателей поворотов; 2, 7, 17, 19, 51-лампа контрольных фонарей АМН12-3; 3, 9-фонарь тракторный передний; 4, 40, 41-лампа А12-21-3; 5-приемник указателя температуры масла; 6, 46, 48-лампа А12-5; 8-указатель давления масла; 10-приемник указателя уровня топлива; 11-тахоспидометр; 12-датчик указателя уровня топлива; 13-фара передняя тракторная левая, 4, 44-лампа А12-50+40; 15-датчик указателя температуры; 16-указатель тока (амперметр); 18, 29-разъемы колодочные 8-миконтактные; 20, 33, 70, 73, 74-фонари контрольных ламп; 21-генератор; 22-батарея аккумуляторная 2 шт; 23-фара передняя тракторная правая; 24-стартер; 25, 71, 78-разъем колодочный одноконтактный; 26-сигнал звуковой; 27-блок предохранителей; 28-свечи накаливания; 30-реле; 31-замок-включатель; 32, 72, 75, 77-лампы освещения щитка приборов А12-1; 34, 53, 55, 68-патрон лампы; 35-лампа А12-1, 5; 36-патрон лампы; 37, 45-разъем колодочный шести-контактный; 38-включатель "стоп" сигнала; 39-выключатель, исключающий пуск двигателя при включенном реверсе; 42-фонарь тракторный задний правый; 43-фара задняя; 46, 48-лампа А12-5; 47-фонарь номерного знака; 49-розетка ПС300А; 50-выключатель сигнала; 52-фонарь тракторный 54-выключатель габаритных фонарей; 56-стеклоочиститель; 57-омыватель электрический; 58-электродвигатель отопителя кабины; 60-плафон кабины; 61-выключатель омывателя; 62-обогреватель заднего стекла кабины; 63-переключатель вентилятора и плафона; 64-выключатель отопителя и обогревателя; 65-переключатель указателей поворотов; 66-предохранитель термобиметаллический; 67-выключатель рабочих фар; 69-переключатель дальнего света; 76-розетка переносной лампы; 79-выключатель "массы"; 80-разъем колодочный четырехконтактный

Примечание: расцветка проводов: Б - белая; Ч - черная;
К - красная; Р - розовая; О - оранжевая;
Ж - желтая; З - зеленая; Г - голубая;
Ф - Фиолетовая; С - серая; Кор - коричневая
Рис. 2 на схеме включает электрооборудование кабины.

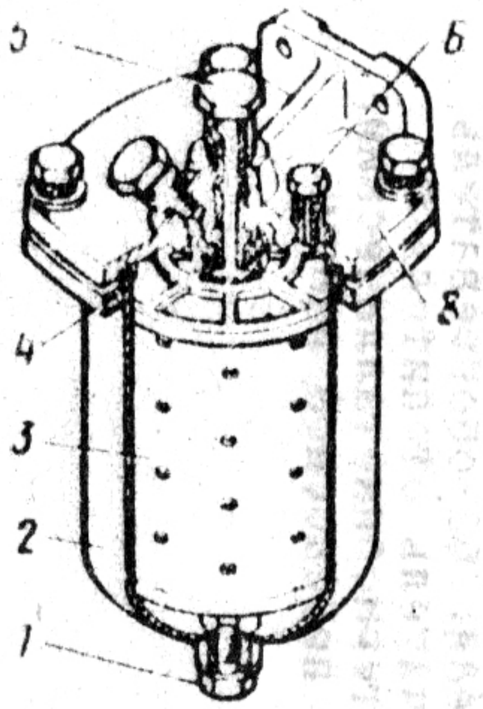

Рис. 4. Фильтр топливный тонкой очистки

1 - пробка отверстия для слива отстоя; 2 - колпак; 3 - элемент фильтрующий; 4 - кольцо нажимное; 5 - болт поворотного угольника; 6 - болт специальный; 7 - болт; 8 - корпус фильтра

Периодичность обслуживания топливного фильтра тонкой очистки - через 1000 м.-ч.

Обслуживание топливного фильтра проводите в следующей последовательности:

- отверните четыре болта 7 (рис. 4) и снимите нажимное кольцо 4 с колпаком 2;
- снимите со штуцера фильтрующий элемент 3 и установите новый;
- промойте колпак 2

Соберите фильтр в обратной последовательности, исключив перекос колпака 2 относительно корпуса 8.

Заполните систему питания топливом при помощи насоса ручной прокачки.

Удаление воздуха из системы питания

Для удаления воздуха из системы питания ослабьте затяжку болта поворотного угольника трубки подвода топлива к фильтру тонкой очистки топлива. Отверните рукоятку насоса ручной прокачки и прокачайте систему до появления из-под болта поворотного угольника чистого (без пузырей воздуха) топлива, а затем затяните болт.

Ослабьте затяжку глухой гайки крепления трубки подвода топлива к топливному насосу и насосом ручной прокачки прокачайте систему до появления чистого (без пузырей воздуха) топлива из-под глухой гайки, затем затяните глухую гайку.

Продолжая прокачивать систему до появления сопротивления, проверьте герметичность в соединениях. При необходимости устраните появившиеся течи (с заменой или без замены уплотняющих прокладок). Нажмите рукоятку насоса ручной прокачки до упора и заверните ее по часовой стрелке до отказа.

Отворачивать технологическую заглушку, расположенную между штуцерами на головке топливного насоса, при удалении воздуха из системы питания категорически запрещается.

Свеча накаливания

С целью облегчения пуска двигателя при отрицательной температуре в каждую головку цилиндра двигателя установлена свеча накаливания. Схема установки свечи накаливания в головке цилиндра показана на рис. 5.

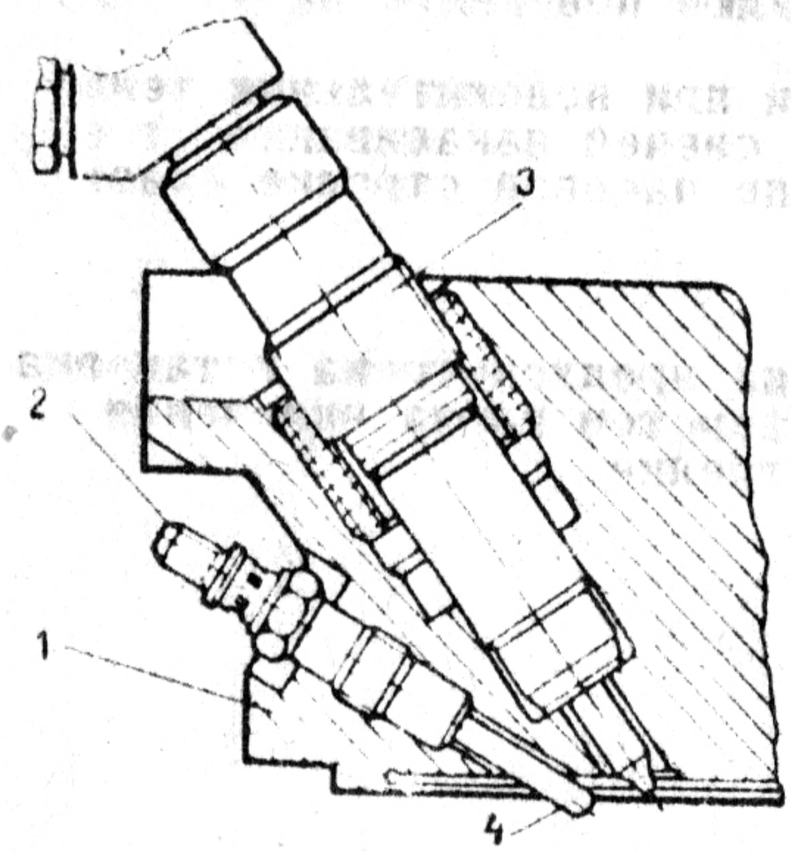

Рис. 5. Схема установки свечи накаливания:
1 - головка цилиндров; 2 - свеча накаливания; 3 - форсунка; 4 - элемент нагревательный

Свеча накаливания является источником калоризаторного воспламенения распыленного топлива, в которой нагревательным элементом служит спираль, заключенная в оболочку. После включения свечи через 40-60 с температура оболочки спирали на расстоянии 2-3 мм от торца достигает 1000°С.

Свеча накаливания установлена в головке цилиндра таким образом, чтобы нагревательный элемент находился в камере сгорания и зоне конуса распыла топлива форсункой.

Подключение свечей накаливания на двигателе осуществляется по однопроводной схеме.

В процессе эксплуатации свечи накаливания не требуют ухода.

Пуск двигателя при отрицательной температуре до минус 25°С

Пуск двигателя, укомплектованного свечами накаливания, при отрицательной температуре производится в следующей последовательности:

- подготовьте двигатель к пуску и работе при отрицательной температуре согласно указаниям инструкции по эксплуатации;
- включите свечи накаливания, повернув ключ включения стартера на 45° по часовой стрелке и оставьте в таком положении на 40-60 с (при этом на щитке приборов загорается контрольная лампа), затем включите стартер, повернув ключ еще на 45° в ту же сторону;
- прокрутите коленчатый вал двигателя 3-5 с и плавно выключите декомпрессор (компрессия включена). Как только двигатель начнт давать беспрерывные вспышки и коленчатый вал начнет набирать обороты, выключите стартер, повернув ключ против часовой стрелки на 90°. В случае, если после первой попытки двигатель не запустился, произведите повторный пуск через 1-1,5 мин в той же последовательности.

При этом необходимо помнить, что беспрерывная работа стартера не должна превышать 20 с, а время включенных свечей 1 мин.

Если двигатель запустился, но частота вращения коленчатого вала начинает снижаться, поверните ключ включения стартера на 45° - включите свечи на время не более 1 мин (режим сопровождения), а затем выключите свечи (ключ поверните на 45° против часовой стрелки).

Запуск двигателя, прогретого и при положительных температурах, произведите без включения свечей накаливания, т. е ключ включения стартера поверните по часовой стрелке сразу на 90°.

Примечание

Запуск двигателя, на котором не предусмотрена установка свечей накаливания, производите поворотом ключа включения стартера сразу на 90° по часовой стрелке.

Ц. сл. тракт. Зак. 60

ВНИМАНИЕ !

Двигатель Д2IAI укомплектован масляным фильтром с бумажным фильтрующим элементом вместо центробежного фильтра (центрифуги).

Устройство фильтра показано на рисунке.

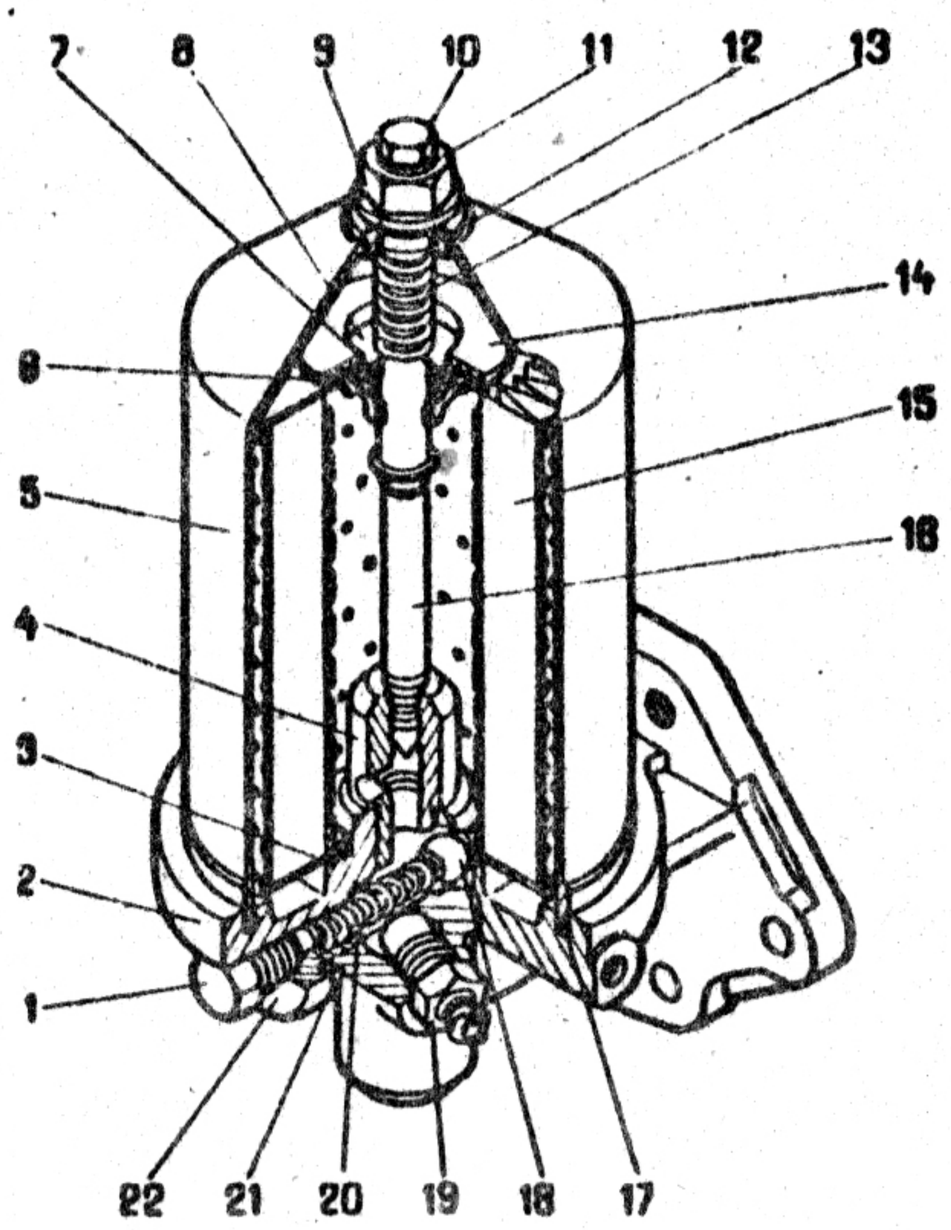

Рис. Фильтр масляный с ВФЭ :

I,I0,22 - пробки; 2 - корпус; 3,6,8,9,II,2I - прокладки; 4 - штуцер; 5 - колпак; 7,I2,I7 - кольца; I3,20 - пружины; I4 - чашка опорная; I5 - элемент фильтрующий; I6 - стержень фильтра; I8 - шарик; I9 - датчик температуры

Обслуживание фильтра

Периодичность технического обслуживания фильтра - 500 мч и заключается в промывке деталей и замене фильтрующего элемента.

Замену фильтрующего элемента производите в следующей последовательности:

- отверните пробку-болт I0 и через I0-I5 мин отверните стержень I6;
- снимите колпак 5 фильтра и фильтрующий элемент I5;
- установите новый фильтрующий элемент, обратив внимание на наличие уплотняющих прокладок (при их отсутствии допускается приме-

ние прокладок со снятого фильтрующего элемента);

- установите колпак фильтра, исключая его перекос, затяните стержень I6, а затем заверните болт-пробку.

Ц. сл. эракт. Зак 163*

АККУМУЛЯТОРЫ-СУХОЗАРЯЖЕННЫЕ

STORAGE BATTERIES ARE DRY-CHARGED

LA BATERIA SECA

LES ACCUMULATEURS SONT CHARGÉS

DE PILES SÈCHES

Трак. сб. Зак. 25*

Made in Russia

TRACTOR T25A 2

Certificate

T25A.00.000.ПС

GENERAL DATA

Tractor type	Universal, wheeled, reversible, drawbar pull 0.6tf
Tractor model	T25A
Modification	T25A2
Date of production	29.09.94 г.
Tractor serial number	677830
Engine model	D2IAI
Engine serial number	9324
Fuel pump model	53.1111004-21 or 53.1111004-22
Power transmission number	68111

SPECIFICATIONS

Tractor overall dimensions, 280-7II (IO-28) types (at middle setup), mm:	
length (with linkage and weights)	3I80
width (minimum track)	I472
height to hood	I350
to to cab	2477
to canopy	2492
to roll guard	2452
Wheel base (at middle setup), mm	I775
Track, mm:	Adjustable
front	I200-I400
reur, 280-7II (IC-28) types	I200-I480
Crop clearance (under brake sleeves), 280-7II (IO-28)	

types ,mm,min.:

high setup	634
middle setup	564
low setup	427
Minimum ground clearance,mm	278

Speeds and rated drawbar pull,280-7II (I0-28) tyres

Gear	Speed,km/h forward	Speed,km/h reverse	Drawbar pull kgf(H)
Ist	4,76	4,76	79I(79I0)
2nd	7;0	7,0	653(6530)
3rd	7,8	7,8	567(5670)
4th	II,4	II,4	3I9(3I90)
5th	I4,3	I4,3	2I3(2I30)
6th	2I	2I	77(770)
Low forward,Ist	I,33	-	79I(79I0)
Low Ist at 900rom	0,67	-	=
Low forward,2nd	I,98		79I(79I0)

Engine perfomance (standard atmospheric conditions, temperature and fuel density:

a) at rated net power:

rated net power,KW(hp)	$2I,4_{-3}$ (29_{-4})
maximum specific fuel consumption g/KW·h(g/hp·h)	242^{+7} ($I65^{+5}$)
engine speed,rpm	$I800^{+}_{-}27$

b) at rated gross power:

rated gross power,KW(hp)	$22,5_{-3}$ ($3I_{-4}$)
maximum specific fuel consumption,g/KW·h(g/hp·h)	224^{+7} (165^{+5})
engine speed,rpm	$I800^{\pm}27$
Rated voltege,V	I2
Universal hydraulic implement system,maximum working pressure,kgf/cm^2(MPa)	I75 (17,5)
Three-point attachment load capacity,kg	600
Fuel tank capacity,I	53

STANDARD EQUIPMENT

Designation	Description	Qnty	Serial No	Parcking designation	Note
T25A 2	Tractor	I			Spare parts case and case with a set of unmounted parts are fixed inside tractor packing or shipped in an individual packing, if the tractor is shipped without packing
	Set of spares	I			
	Set of unmounted parts				
T25A.00.000ПС	Tractor Certificate	I			Under hood.
	Instruction manual	I			Under hood.
	Spare parts catalogue	I			Under hood.
T25A.00.000Д7	Tractor depreservation manual	I			Under hood.
	Tractor packing list	I			If the tractor is shipped unpacked, the item shall be found under hood. In case of tractor shpment in partial or complete packing find the List in tractcr packing pocket for packing list.
	Starter switch key	1			Under hood

SET OF TRACTOR UNMOUNTABLE PARTS AND ACCESSORIES 5.

Designation	Description	Quantity
A25.35.039	Chain assy	1
14.56.022-2A	Lower link, right	1
14.56.023-2A	Lower link, left	1
14.56.036-4	Upper link	1
14.56.190	Drawbar	1
A20.56.356	Clevis pin	1
A20.56.405	Spring cotter pin	1
14.56.185-2	Upper link tube	1
14.56.046-Б	Adjusting chain	2
14.56.192	Chain eye	4
D21-1308006-Б2	Fan disk	1
	Nut M10.6H.8.40.019	8
	Washer 22.02	1
	Cotter pin 2,5x16.019	8
D144-1104236	Fuel pipe plug	4
119-73B	Protection cap	2
119-74A	Plug	2
A23.10.003 (119-85A)	Protection bushing	4
A65.01.006 (14.18.129)	Protection bushing	1
6A1-2024 or 119-o12B	Sprager plug	2
C311B-3721000-01	Horn	1
BK3185.3704000	Battery "switch"	1
	Screw BM6.6gx12.58.019	3

ACCEPTANCE CERTIFICATE

Tractor T25A, serial Nr. 677830 is in full compliance with standards existing in the USSR and found fit for export.

Date of manufacture 29.09.942 Signature [illegible]

PRESERVATION CERTIFICATE

Tractor T25A, serial Nr. 677830 has been subjected to preservation in compliance with the requirements specified by standards and zakaz-narjads.

Date of preservation 29.09.942 Preservation term 1 год

Preserved by [illegible] (Signature)

Upon preservation the tractor has been accepted by [illegible] (Signature)

Ц. сд. тракт. Зак. 30*

TRACTOR DEPRESERVATION INSTRUCTIONS

Preserved till

1. Remove the film and paper from auter surfaces.

2. Remove slushing compound from outer surfaces by cleaning them with cotton wastes soaked in organic solvent.

3. Turn the engine crankshaft several times by means of tbe starter with engaged compressor release device.

4. Fill the used oils into the engine and tractor according to maintenance instructions.

IMPORTANT NOTICE

Some parts and units of the electrical equipment are not installed on the tractor which has been delivered to You, but they are supplemented to the tractor. It is mentioned in the tractor Certificate where such parts and units have been put.

To install them on the tractor, strip and then scrape to bright metal the ends of the connecting wires. While installing, guide yourself by the Circuit Diagram of electrical equipment of the tractor, which is appended to the tractor Description, Operating and Maintenance Instructions.

ц. Сдачи тр. Зак. 98